J. Basic. Appl. Sci. Res., 1(10)1642-1646, 2011
© 2011, TextRoad Publication

ISSN 2090-4304
Journal of Basic and Applied
Scientific Research
www.textroad.com

A Novel Membership Function Circuit

SadeqAminifar and MohammadaminDaneshvar

SamaTechnical and Vocational Training school, Islamic Azad University,Mahabad Branch,Mahabad, Iran

ABSTRACT

This paper introduces a new method for introducing Membership function in fuzzy systems. And a new high-speed analog fuzzification circuit was introduced for implementing this Idea and verified by simulations. The addition of rectifying linear voltage to current converters allows its utilization as a voltage-mode fuzzifier. This scheme is expected to find application in neuro-fuzzy processors where adaptation of the membership function parameters is required. The result is a faster, cheaper and higher controllable compare to conventional fuzzification techniques.

Keywords: Fuzzifier, fuzzy controller, Mixed-mode circuits.

INTRODUCTION

Membership functions are characterized by degree of association curves. One of the most common shapes is the trapezoidal function. This function includes triangular, S- and Z-shaped functions.

Analog approaches are inherently faster and require much smaller silicon area and lower power consumption (Baturone, l., et al, 1997; 1998; Nakamura, Lin, et al, 2004). Their main disadvantage is that they are not so easily programmable. In this paper we present a new high-speed current-mod/voltage-mode fuzzifier characterized by a trapezoidal membership function.

The fuzzifier presented in this paper suitable circuit to analyze and tune the nonlinear parameters of membership functions. These techniques provide a method for the fuzzy modeling procedure to learn information about a data set, in order to compute the membership function parameters that best allow the associated fuzzy inference system to track the given input/output data. This learning method works similarly to that of neural networks. Our discussions are started with summery of Nero-Fuzzy structures and back propagation algorithm and then describing BiCMOS structure along with circuit designs of fuzzifier (E. H. Mamdani,et al, 1997; Hiroyuki Watanabe, et al, 1990).

In fact, because of that it is difficult to analyze highly nonlinear systems with classic methods, we convert classic world data into corresponding language terms. This application is said "fuzzifying".
Therefore, for mapping classic world to fuzzy world, we need a circuit said Membership Function MFC(MeghrajKachare, et al, 2005). It is introduced a new design strategy for Fuzzifier implementation, in this paper. This method is the result of a new design method for digital fuzzy logic controller (Fuller, R. et al, 2000; Min-Yuan Cheng, et al, 2010; Rong-Jong Wai, et al, 2002).

In this method all inputs and outputs of whole system are digital data, but the structure of different internal blocks is nearly analog.

Fuzzy membership definition

It is clear that general shape of a membership function which include triangle and ascending and descending ramps is as the nonsymmetrical trapezoidal shown in figure 2, in which B is start point and E is the end, from B to Ml and from Mh to E are ascending and descending slops, respectively. The interval between Ml and Mh is plateau region which its value is corresponding to logical one.
In the strategy we introduced, input signal is digital and output membership degree is analog. As a result, we have considered horizontal axes as a digital data 5-bit (32 different binary states), but vertical axes as an analog signal in current-mode. It works in the range 58ua range.
The membership degree is as different and specific levels of current.

Each level is a coefficient of a base current and this base current is specified according to the ascending and descending slopes.
The worst-case error is 1.3uA, which is equal to 5-bit resolution.

The circuit presented for fuzzifier is capable of performing different membership function shapes with deferent slopes.

For example:if we chose d, = d_h , M_l<M_h , it results a symmetric trapezoidal membership function.
Changing d_l,d_h, we will have different slopes in either side of the trapezoidal. For clarifying we explain some examples:

Corresponding author: SadeqAminifar, SamaTechnical and Vocational Training School, Islamic Azad University, Mahabad Branch, Mahabad, Iran. saminifar@yahoo.com

Choosing B = M_L = M_h, E = B + 3; we will have 2 levels (E-B-1) in descending slope; each level takes a coefficient of Iref 1 2 = I_{base}; If I = B + 1 then I = I_{ref} - (I_{ref} 12 = i_{base}) = I_{ref} 12 and the output current, where I =B+1, will be zero.
Now, if we want to have descending slops with lesser slop, we have to choose larger amplitude for dl . There is an example in the figure 2. IfE = M_1 = M_h , E = B + 6 then i_{base} = I_{ref}/5 and the amplitude of levels are i_{ref}5, 2i_{ref}/5, 3i_{ref}5, 4i_{ref}5, 5i_{ref}5 = I_{ref}.
Changing E, we will have different descending slopes as described for some different values of B .
For ascending slopes, changing B with constant M_1 = M_h = E , we can similarly perform any arbitrary slop, for example if If E = M_1 = M_h , E = B + 11 then I_{base} = I_{ref} /10 and the amplitude of levels are i_{ref}l10, 2i_{ref}/10, 3i_{ref}/10, 4i_{ref}/10, 5i_{ref}/10, 6i_{ref}/10, 7 i_{ref}/10, 8i_{ref}/10, 9 i_{ref} /10, 10 i_{ref} /10 = i_{ref}, as shown in figure 2.
Considering examples mentioned above for performing ascending and descending slopes, choosing different values for parameters, we can have different triangular and trapezoidal shapes for performing membership functions, symmetrically or asymmetrically.
There are some examples for clarification.

Given M, = M_1, M_h, = B + 9, E = M_h + 6, we have a triangular membership function which its ascending slop has 10 steps with i_{base} = I_{ref} /10, that is, if input signal I becomes B+ 1 the amplitude of output current will be I_{ref} /10, and if I = B+2 then output current becomes 2i_{ref} /1 0, when I = B + 1 ° then output current will become reference current (I_{ref}). The descending slop of triangular has five steps while the step with I_{ref} amplitude is common between ascending and descending slopes. The base current in that case is one fifth of reference current. The output current in M1 = M, is equal to reference current which is decreased I_{ref} /5 for everyone step respect to increasing input digital signal (I). That is, if I = MI + 1 then output current is equal to I_{ref}- I_{ref} /5 = 4 i_{ref} /5 and output current will be lout = 3 I_{ref} /5 as if I = Mi +2. IfI = E then output current discusses to zero.
The both side slops of this membership function are the same as the triangular membership function mentioned above. But in this case we have different M_1 and M_h. The output current will remain reference current from M_1 to M_h.

The Fuzzifier Circuit Algorithm

Crisp input signal and the chosen parameters for performing favorable membership function, are applied to switch controller block and the output of this block are digital signals which control BiCMOS analog part.
According to these parameters, the quotient is I_{base}. I_{Base} will be multiplied by ordinal numbers between Band E.
If input signal is smaller than B or greater than E, the switches of rightpart of circuit will be disconnected and output current will be zero.
The more detailed of the way fuzzifier circuit works is illustrated in figure 1.
Fig. 1: block diagram of idea which fuzzifier has designed on it

Considering the selection of parameters mentioned in figure 2, all normalized membership functions only could take this values mentioned bellow for membership degree. If number of steps = 1 then normalized membership degree is {1}. If number of steps = 2 then normalized membership degree are {1/2, 1}. If number of steps = 3 then normalized membership degree are {l/3, 2/3, 1}.If number of steps = 4 then normalizedmembership degree are {1/4, 1/2, %, I}. and so on up to ifnumber of steps
=15 then normalized membership degree are {1I15, 2/15, 1/5, 4/15, 113,2/5,7/15,8/15,3/5,2/3,11/15,4/5,13/15, 14/15, I}.

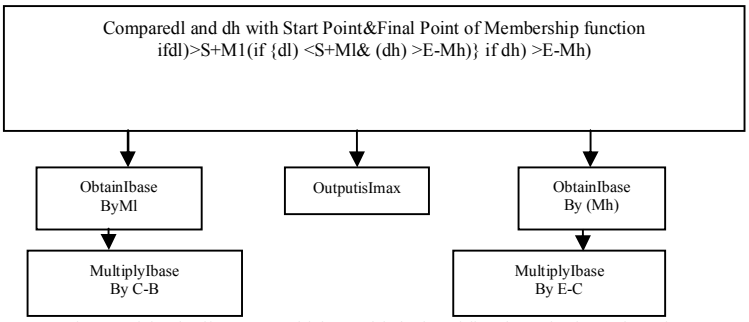

Fig. 1: block diagram of idea which fuzzifier has designed on it

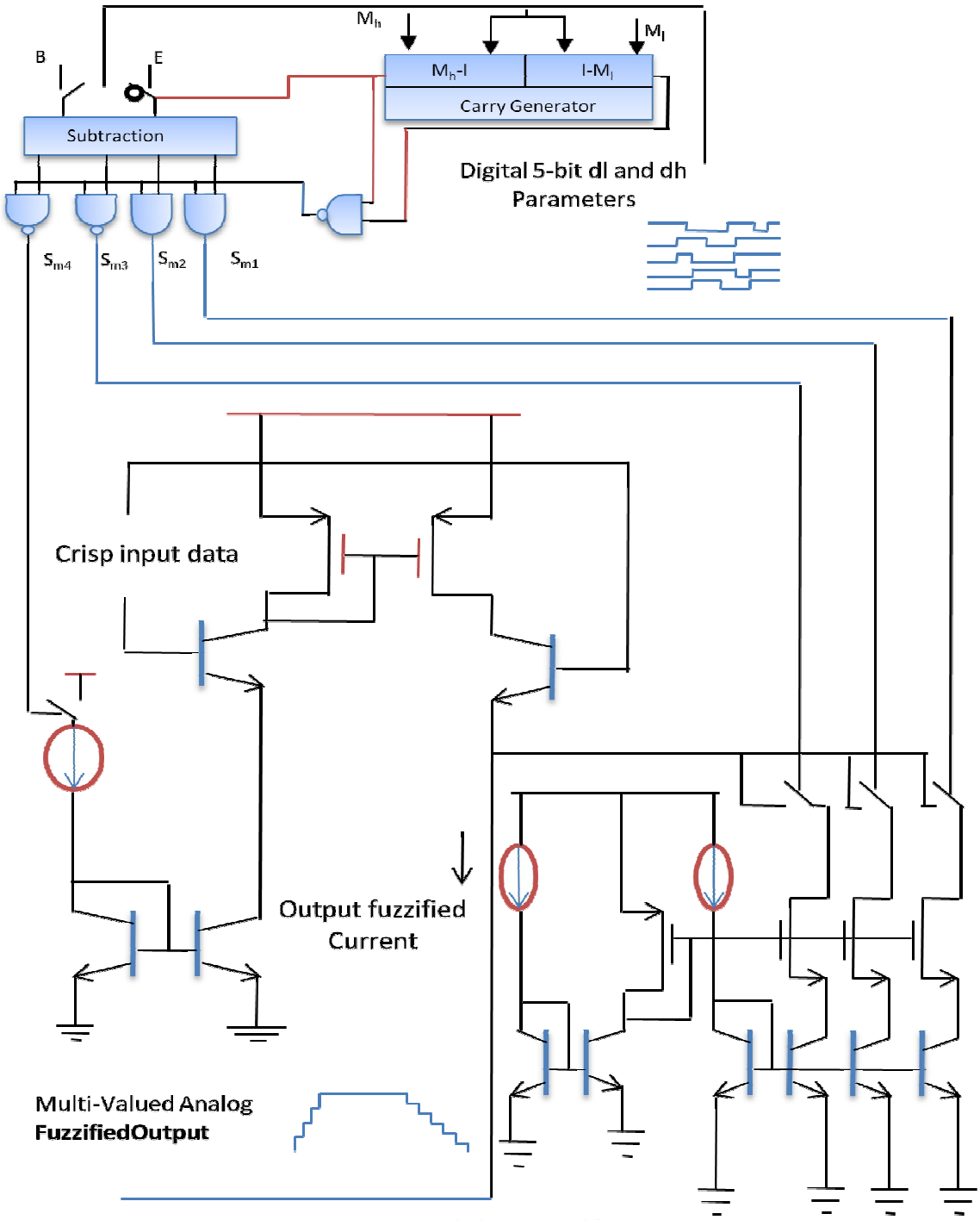

Fig. 2 Proposed BiCMOSFuzzifier

Fuzzifier circuit

Considering the descriptions mentioned before, and according to the B, Ml, Mh and E parameters, at first we have a division, which its numerator is reference current and its denominator is $d_1 = M_1$ - B or d, = E-M_h.

In Figure 3 for the left GTC Ii=(Vin-Vb)/R, Ii=(Vb-Va)/R and Iout=Iamp. The output current is given by l<=lol=lamp(Vin-Va)/(Vb-Vc).It has the piecewise linear characteristic shown on the left of Fig. 3. The left GTC in Fig. 3 is used to generate an output current 102 with the piecewise linear characteristic shown in Fig. 3 (middle).

Va,Vl~,Vc,Vd' and lamp=Vamp/R. Variables and parametdrs cart be defined in the current domain according tor,lamp=Vamp/R, lin=Vm/R, Ja=Va/R, lb=Vb/R, lc=Vc/R and ld=Vd/R. In this case the circuit of

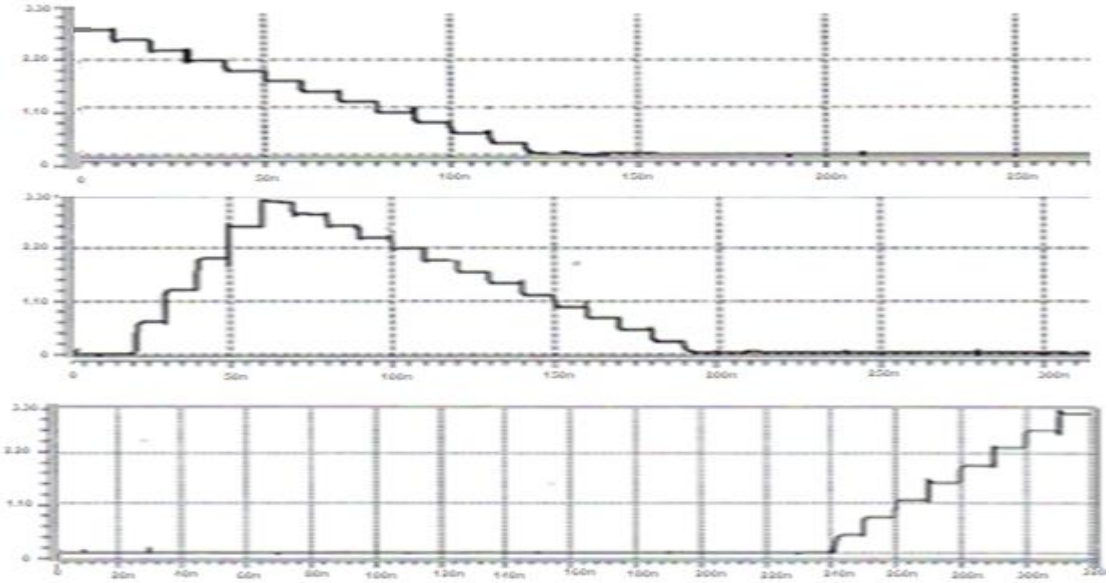

Fig. 3: The obtained ascending ramp, triangular shape and descending membership functions alone can be considered a current-mode fuzzifier. Currents lin/ lamp, la, and lc can be replicated (and rectified) using current mirrors.

Digital Circuitry for Switches Controlling

The digital circuit illustrated below is used to control switches, shown in analog circuit in figure3.

This structure was established of as-bit subtraction and two 5-bit carry generator circuits and some extra logic gates and switches.

The dl and d, four-bit parameters are applied to this structure and will generate S_{dl} to S_{d3} for applying to LVCC circuit.

Applying E, B and input signal (1) to this circuit yields S_{ml}, S_{m2}, S_{m3}, and S_{m4} for controlling GTC circuit.

S_{d4} and S_{d5} are produced to choose either Blockl or Block2, in order to specify the reference current is divided over one to fifteen.

HSPICE simulations using 2pm BiCMOS technology N-well parameters (MOSIS) were performed. P and N transistors with dimensions 24/2 and 12/2 (in pm) were used for the simulations. Fig. 7 shows the HSPICE simulated transfer characteristic of the LVCC circuit of Fig. 7. The high speed rectifying characteristic can be verifed with the transient response to a IV, lOMHzsinewave signal.

Conclusion

A versatile analog BiCMOS current-mode that generates a trapezoidal membership function is introduced. Proposed in this paper contains using Nero-Fuzzy architecture to implement fuzzy logic controller chip with two inputs, four membership functions for each one, sixteen rules and one output.

It consists of new Fuzzifier circuit and improved Multiplier/Divider to implement fuzzy controller.

ACKNOWLEDGEMENTS

The authors would like to thank Sama Vocational and Training School,Islamic Azad University,Mahabad branch, for scientific guidance.

REFERENCES

Baturone, l., Huertas, 1.L., Barriga, A., Sinchez-Solano, S., (1998) " Voltage-mode multiple input maximum circuit," Electronics Letters, Vol. 30, N. 9, pp. 678-680.

Baturone, 1.,Sdnchez-Solano, S., Barriga, A., Huertas, 1. L., (1997) " Implementation of CMOS fuzzy controllers as mixed-signal IC's, IEEE Transactions on Fuzzy Systems," Vol. 5, N. 1, pp. 1-19.

E. H. Mamdani, (1997) "Application of Fuzzy Logic to Approximate Reasoning Using Linguistic Synthesis," IEEE Trans. Computers, 26(12):1182-1191.

Fuller, R. (2000). "Introduction to Nero-Fuzzy Systems. Advances in Soft Computing Series," Springer-Verlag, Berlin/Heildelberg.

Gam Ali Mazer, HedQriSarmi, VadKibi, (2010) ” A fuzzy inference engine for Karsi numeral characters recognition” Expert Systems with Applications, Volume 37, Issue 9, Pages 6327-6337.

Hiroyuki Watanabe, Wayne Dettloff, and Kathy E. Yount, (1990) "A VLSI Fuzzy Logic Controller with Reconfigurable, Cascadable Architecture," IEEE Journal of SolidState Circuits, Vol. 25, April.

Jeeon-ShiongWanog; Lee, C.S.G, (2002) "A fuzzy inference systems for classification applications” IEEE Transactions on Fuzzy Systems, Volume: 10, Page(s): 790 - 802.

Nakamura, Lin, C.H. and shen,P.H. (2004). "A fuzzy neural network speed controller for permanent-magnet synchronous motor drive". IEEE transactions on fuzzy systems,9(5), 751-759.

MeghrajKachare, Jaime Ramírez-Angulo, , Ramón Gonzalez Carvajal, and Antonio J. López-Martín, (2005) “New low-voltage fully programmable CMOS triangular/trapezoidal function generator circuit” IEEE TRANSACTIONS ON CIRCUITS AND SYSTEMS—I: REGULAR PAPERS, VOL. 52, NO. 10,pp, 2033-2042.OCTOBER.

Min-Yuan Cheng, Hsing-Chih Tsai, Erick Sudjono, (2010)” Evolutionary fuzzy hybrid neural network for project cash flow control” Engineering Applications of Artificial Intelligence, Volume 23, Issue 4, Pages 604-613.

Rong-Jong Wai, (2002) “Hybrid fuzzy neural-network control for nonlinear motor-toggle servo mechanism” IEEE Transactions on Control Systems Technology, IEEE Transactions on Volume: 10, Page(s): 519 – 532.