J. Basic. Appl. Sci. Res., 4(10)17-26, 2014
© 2014, TextRoad Publication

ISSN 2090-4304
Journal of Basic and Applied Scientific Research
www.textroad.com

Analysis of Non-Newtonian Unsteady Thin Film MHD Flow on a Vertical Moving and Oscillating Belt

Saleem Nasir[1], Taza Gul[1*], S. Islam[1], R. A. Shah[2], Muhammad Altaf Khan[1], Muradullah[3]

[1] Department of mathematics, Abdul Wali K.U Mardan, KPK Pakistan
[2] Department of Basic Sciences, University of Engineering and Technology Peshawar, KPK Pakistan
[3] Department of mathematics, Islamia College University Peshawar, KPK Pakistan

Received: July 6, 2014
Accepted: September 1, 2014

ABSTRACT

Magnetohydrodynamic (MHD) thin film flow of an unsteady third order fluid is considered. The non linear partial differential equations are solved analytically by using Optimal Homotopy Asymptotic Method (OHAM) and Adomian Decomposition Method (ADM). The Comparison of both methods is analyzed numerically and graphically. The effects of model parameters have also been studied.

KEYWORDS: Unsteady thin film flows, MHD, Lifting, Drainage, Third order fluid, OHAM and ADM.

I INTRODUCTION

Non-Newtonian thin film flows have large applications in a number of technological processes including production of polymer films or thin sheets. In physical configuration of non-Newtonian fluids it is complicated to clarify their mechanical manners by a particular constitutive equation. For this reason, a great variety of constitutive equations have been proposed [1]. Siddiqui et al. [2] studied the thin film flow of Sisko fluid and Oldroyd 6-constant fluid on a vertical moving belt. The nonlinear equations governing the flow solved using homotopy perturbation method. Volume flux and average velocity are also calculated. Hayat and Sajid [3] investigated the comparison between Homotopy Perturbation Method (HPM) and Homotopy Analysis Method (HAM) for thin film flow of non-Newtonian fluids on moving belt. Nargis and Tahir [4] investigated the thin film flow of a third order fluid in two cases when the fluid moves down an inclined plane and moves on a moving belt. The volume flux and average film velocity are also discussed.

There is no single constitutive equation that can be used to examine all the non-Newtonian fluids, different linear and non linear equations have been proposed. A third grade fluid is a subclass of non-Newtonian fluid and its governing non-linear equation has successfully studied and treated in many literatures. Ariel [5] discussed the steady and laminar flow of a third grade fluid through a porous flat channel. The flow is governed by a non-linear boundary value problem and different numerical methods are developed to obtain the appropriate solution.

Sahoo et al. [6] investigated the non-Newtonian boundary layer flow and heat transfer over an exponentially stretching sheet with uniform transverse magnetic field. They find the combined effects of the partial slip and the third grade fluid parameters on the velocity profile. Islam et al.[7, 8] discussed the unsteady second grade fluid flow between wire and die. The problem is solved by OHAM and the ideas of OHAM extend not for the solution of linear and non-linear differential equations but also can be applied for linear and non-linear partial differential equations.

The study of unsteady magnetohydrodynamics (MHD) thin film flows has received substantial concentration in the past due to its applications in the field of engineering, polymer industry and petroleum industries. TazaGul et al. [9] investigated the heat transfer analysis in electrically conducting third grade thin film fluid. They studied the combined effect of heat and MHD on the velocity field and the effects of model parameters on velocity, skin friction and temperature variation. Khan et al. [10-12] discussed the solution of the unsteady flow of an incompressible, electrically conducting third grade fluid bounded by porous plate using homotopy analysis methods (HAM). The analytical solutions are shows through graph. Ali et al. [13] investigated the numerical solution of electrically conducting fluid flow and heat transfer over porous stretching sheet. The governing non-linear partial differential equations of motion have been numerically solved by Method of Stretching Variables. The effects of physical parameters Magnetic parameter, Grashof number, Prandlt number and injection parameter S have been observed on velocity, temperature distributions. Idrees et al. [14] studied the low of incompressible fluid between two parallel plates and the governing fourth order non linear differential equation is solved by using Optimal Homotopy Asymptotic Method. This method is effective, sampler and easier. Yongqi and Wu [15] discussed the unsteady flow of an incompressible fourth grade fluid in a uniform magnetic field and the unsteady flow is induced by oscillating two-dimensional infinite porous plate. They compared the flow behavior of the fourth-grade non-Newtonian fluid with the Newtonian fluid. Aiyesimi et al. [16] investigated thin film flow of an MHD third grade fluid down an inclined plane. The solutions of

Corresponding Author: Saleem Nasir, Department of mathematics, Abdul Wali K. U Mardan, KPK Pakistan. tazagulsafi@yahoo.com

problem obtain by traditional perturbation and homotopy perturbation technique. The effect of slip parameter, Magnetic parameter and other parameters involved in the problem are discussed. Alam et al.[17] discussed the magnetohydrodynamic (MHD) thin-film flow of the Johnson–Segalman fluid for lifting and drainage problems on vertical plane. The nonlinear differential equations are solve analytically using the Adomian decomposition method (ADM) and discuss the effect of different parameters on velocity field.Ajadi [18] investigated the viscoelastic fluid between oscillatory walls in the presence of magnetic field and obtained the closed form solutions for velocity and temperature profiles. The shear stress and Nusselt number are found at the walls and show the results graphically. Liao [19] investigated the homotopy analysis method, for nonlinear problems which give the analytic solutions of magnetohydrodynamic viscous flows of non-Newtonian fluids over a stretching sheet. He expresses the solution of non linear differential equations of second order and third order power law fluids. Gamal [20] examined the effects of magneto hydrodynamics (MHD) on thin film of unsteady micro polar fluid through a porous medium. He considered these thin films for three unlike geometries and the governing continuity, momentum and angular momentum equations are converted into a system of non-linear ordinary differential equations.

The main aim of the current work is to the study of thin film of a third grade fluid on a vertical oscillating belt under the influence of magneto hydrodynamics (MHD) using adomian decomposition method and optimal Homotopy Asymptotic Method. In 1992 Adomian [21, 22] introduced the ADM for the approximate solutions for linear and non linear problems. Wazwaz [23, 24] used ADM for the reliable treatment of Bratu-type and Rmden-Fowler equations. Idrees et al. [25] studied the Optimal Homotopy Asymptotic Method (OHAM). They apply OHAM on wave equations in different forms and obtained the solution. They show that OHAM is successful, simpler and easier method. Duan [25] investigated the solution of multi-order and multi-point boundary value problems for nonlinear ordinary differential equations and partial differential equations by using the Adomian decomposition method (ADM). They use Duan's convergence parameter, which provides a significant advantage during the calculations of the solution components for nonlinear boundary value problems. Husain and Ahmad et al [26-27] discussed different numerical techniques for the combined effect of MHD and porosity. They have shown the effect of different parameters on the velocity as well as on pressure field.

II BASIC EQUATION AND FORMULATION OF THE FIRST PROBLEM

We assume an oscillating and vertically upward moving belt. $V$is the uniform velocity of the belt. A uniform Magnetic field is applied transversely to the belt. The belt caries with itself a thin layer of third order liquid during it upward motion. The thickness of the fluid is uniform and considered asδ.The coordinate system is chosen as in which the x-axis is taken perpendicular to the surface of the belt and y-axis is parallel to the belt. Assuming that the flow is unsteady, laminar and the pressure is atmospheric.

The velocity field in its component form as

$$\mathbf{v} = (0, v(x,t), 0) \tag{1}$$

Boundary conditions are:

$$\mathbf{v}(0,t) = V + V cos\omega t \ , \qquad \frac{\partial \mathbf{v}(\delta,t)}{\partial x} = 0 \tag{2}$$

Here $\omega$is used as frequency of the oscillating belt.
The continuity equation is

$$\nabla.\mathbf{v} = 0, \tag{3}$$

By using the above assumptions and Equations (1) the continuity equation (3) is satisfied identically and the momentum equation reduces to the form

$$\rho \frac{\partial \mathbf{v}}{\partial t} = \frac{\partial}{\partial x} T_{yx} + \rho g - \sigma {B_0}^2 \mathbf{v}, \tag{4}$$

The Cauchy stress component T_{xy} of the third order fluid is

$$T_{xy} = \mu \frac{\partial \mathbf{v}}{\partial x} + \alpha_1 \frac{\partial}{\partial t}\left(\frac{\partial \mathbf{v}}{\partial x}\right) + \beta_1 \frac{\partial^2}{\partial t^2}\left(\frac{\partial \mathbf{v}}{\partial x}\right) + 2(\beta_2 + \beta_3)\left(\frac{\partial \mathbf{v}}{\partial x}\right)^3 = T_{yx}, \tag{5}$$

Putting equation (5) in (4)we get

$$\rho \frac{\partial \mathbf{v}}{\partial t} = \mu \frac{\partial^2 \mathbf{v}}{\partial x^2} + \rho \alpha_1 \frac{\partial}{\partial t}\left(\frac{\partial^2 \mathbf{v}}{\partial x^2}\right) + 6\beta_3 \left(\frac{\partial \mathbf{v}}{\partial x}\right)^2 \left(\frac{\partial^2 \mathbf{v}}{\partial x^2}\right) - \rho g - \sigma B_0 \mathbf{v}\,, \tag{6}$$

Introducing non-dimensional variables as

$$\tilde{v} = \frac{\mathbf{v}}{V}\ ,\ \tilde{x} = \frac{x}{\delta}\ ,\ \ \tilde{t} = \frac{t\mu}{\delta^2 \rho}\ ,\ \alpha = \frac{\alpha_1}{\rho \delta^2}\ ,\ \beta = \frac{\beta_3 V^2}{\mu \delta^2}\ , S_t = \frac{\rho \delta^2 g}{\mu V}\ ,\ M = \frac{\delta^2 \sigma B_0}{\mu V}, \tag{7}$$

Where $M$is the magnetic parameter, β is the non-Newtonian parameter,$S_t$is the stock number and α is the non-dimensional variable.
Using the above dimensionless variables in equation (15) and dropping bars we obtain

$$\frac{\partial v}{\partial t} = \frac{\partial^2 v}{\partial x^2} + \alpha \frac{\partial}{\partial t}\left(\frac{\partial^2 v}{\partial x^2}\right) + 6\beta \left(\frac{\partial v}{\partial x}\right)^2 \left(\frac{\partial^2 v}{\partial x^2}\right) - S_t - Mv, \tag{8}$$

And the boundary conditions are

$$v(o,t) = 1 + \cos\omega t \ , \qquad \frac{\partial v(1,t)}{\partial x} = 0 \ , \tag{9}$$

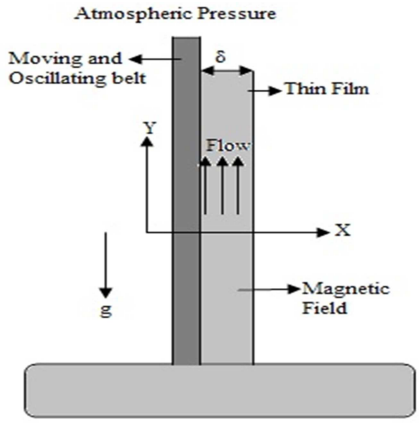

Fig 1: Geometry of lift problem

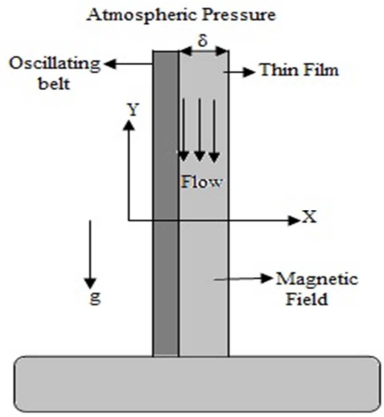

Fig 2: Geometry of drainage problem

III ADOMAIN DECOMPOSITION METHOD

Here we introduced the basic concepts of ADM method. The ADM method is used to decompose the unknown function$v(x,y)$ into its components$v_0(x,t) + v_1(x,t) + v_2(x,t)$ ...defined by

$$v(x,t) = \sum_{k=0}^{\infty} v_k(x,t) \tag{10}$$

By using simple integral we can find separately the unknown components v_0, v_1, v_2 , … … …

We first consider the general problem in operator form

$$\mathcal{L}_x v(x,t) + \mathcal{L}_t v(x,t) + \mathcal{R}\big(v(x,t)\big) + \mathcal{M}\big(v(x,t)\big) = g(x,t) \tag{11}$$

Where $\mathcal{L}_x = \frac{\partial^2}{\partial x^2}$the uppermost order partial derivative in *x*, $\mathcal{L}_t = \frac{\partial}{\partial t}$is the highest order partial derivative in *t*,$\mathcal{R}$contains the remaining terms of lower partial derivatives,$\mathcal{M}\big(v(x,t)\big)$ is nonlinear term, and $g(x,t)$ is source term.

Equation (11) can be written as

$$\mathcal{L}_x v(x,t) = g(x,t) - \mathcal{L}_t v(x,t) - \mathcal{R}\big(v(x,t)\big) - \mathcal{M}\big(v(x,t)\big), \tag{12}$$

Applying the inverse operator $\mathcal{L}_x{}^{-1}$ to both sides of equation (12)

Where

$$\mathcal{L}_x{}^{-1} = \iint dxdx, \tag{13}$$

$$\mathcal{L}_x{}^{-1}\mathcal{L}_x v(x,t) = \mathcal{L}_x{}^{-1} g(x,t) - \mathcal{L}_x{}^{-1}\mathcal{L}_t v(x,t) - \mathcal{L}_x{}^{-1}\mathcal{R}\big(v(x,t)\big) - \mathcal{L}_x{}^{-1}\mathcal{M}\big(v(x,t)\big), \tag{14}$$

$$v(x,t) = \mathcal{L}_x{}^{-1}\big(g(x,t) + \mathcal{L}_t v(x,t)\big) - \mathcal{L}_x{}^{-1}\mathcal{R}\big(v(x,t)\big) - \mathcal{L}_x{}^{-1}\mathcal{M}\big(v(x,t)\big), \tag{15}$$

$$v(x,t) = \Psi - \mathcal{L}_x{}^{-1}\mathcal{L}_t v(x,t) - \mathcal{L}_x{}^{-1}\mathcal{R}\big(v(x,t)\big) - \mathcal{L}_x{}^{-1}\mathcal{M}\big(v(x,t)\big), \tag{16}$$

Where Ψ represent the term produced from the integration of the$g$and using the boundary conditions. Since Adomain Decomposition method (ADM) is a series solution method, then result of $v(x,t)$can be given as

$$v(x,t) = \sum_{n=0}^{\infty} v_n(x,t), \tag{17}$$

From equation (1.20)

$$\sum_{n=0}^{\infty} v_n(x,t) = \Psi - \mathcal{L}_x{}^{-1}\mathcal{R}\big(\sum_{n=0}^{\infty} v_n(x,t)\big) - \mathcal{L}_x{}^{-1}\mathcal{M}\Big(\sum_{n=0}^{\infty}\big(v_n(x,t)\big)\Big), \tag{18}$$

$$\mathcal{M}\Big(\sum_{n=0}^{\infty}\big(v(x,t)\big)\Big) = \sum_{n=0}^{\infty} A_n, \tag{19}$$

Where A_n is called Adomian polynomial and equation (18) become

$$\sum_{n=0}^{\infty} v_n(x,t) = \Psi - \mathcal{L}_x{}^{-1}\mathcal{R}\big(\sum_{n=0}^{\infty} v_n(x,t)\big) - \mathcal{L}_x{}^{-1}\big(\sum_{n=0}^{\infty} A_n\big), \tag{20}$$

Write equation (20) in components form

$$v_0(x,t) + v_1(x,t) + v_2(x,t) = \Psi - \mathcal{L}_x{}^{-1}\mathcal{R}\big(v_0(x,t) + v_1(x,t) + v_2(x,t) \ldots\big) - \mathcal{L}_x{}^{-1}(A_0 + A_1 + A_2 \ldots), \tag{21}$$

Comparison for different components of velocity profile$v_0(x,t) + v_1(x,t) + v_2(x,t)$ ..., where the function Ψ described the zero component$v_0(x,t)$.

$$\begin{aligned} v_0(x,t) &= \Psi \\ v_1(x,t) &= -\mathcal{L}_x{}^{-1}[\mathcal{R}v_0(x,t)] - \mathcal{L}_x{}^{-1}[A_0] \\ v(x,t) &= -\mathcal{L}_x{}^{-1}[\mathcal{R}v_1(x,t)] - \mathcal{L}_x{}^{-1}[A_1] \\ v_3(x,t) &= -\mathcal{L}_x{}^{-1}[\mathcal{R}v_2(x,t)] - \mathcal{L}_x{}^{-1}[A_2] \\ &\vdots \\ v_n(x,t) &= -\mathcal{L}_x{}^{-1}[\mathcal{R}v_n(x,t)] - \mathcal{L}_x{}^{-1}[A_n] \end{aligned} \tag{22}$$

IV OPTIMAL HOMOTOPY ASYMPTOTIC METHOD

Here we discussed the fundamental introduce of OHAM. In order to explain OHAM, we consider the following boundary value problem

$$\mathfrak{L}(v(x,t)) + \aleph(v(x,t)) + \mathcal{S}(v(x,t)) = 0,\ \ \mathfrak{B}\big(v(x,t)\big) = 0,\ \ x \in \Gamma, \tag{24}$$

Where$\mathfrak{L}$, is the linear operator in differential equation,$v(x,t)$ is unknown function, $\aleph$ is non linear term, $\mathcal{S}$ is source term, x is spatial variable and t is time variable, Γ is domain of problem and $\mathfrak{B}$ is boundary operator. Equation (24) is called optimal homotopy equation.

According to OHAM, we put the optimalhomotopy

$$\Psi(x,t,\wp): \Gamma \times [0,1] \to \mathbb{R}, \tag{25}$$

Satisfying the following equation

$$[1-\wp][\mathfrak{L}\Psi(x,t,\wp) + \mathcal{S}(x,t)] - \mathcal{H}(\wp)[\mathfrak{L}\Psi(x,t,\wp) + \mathcal{S}(x,t) + \aleph\Psi(x,t,\wp)] = 0, \tag{26}$$

Where p is embedding parameter and$\wp \in [0,1]$, $H(\wp)$is the auxiliary function which is define as

$$\mathcal{H}(\wp) = \wp C_1 + \wp^2 C_2 + \wp^3 C_3 \ldots, \tag{27}$$

$C_1, C_2, C_3, \ldots$, are called auxiliary constants which is find latter.

From equation (26) obviously we can write

$$\wp = 0 \Rightarrow \mathcal{H}[\Psi(x,t,0),0] = \mathfrak{L}\Psi(x,t,\wp) + \mathcal{S}(x,t) = 0, \tag{28}$$

$$\wp = 1 \Rightarrow \mathcal{H}[\Psi(x,t,1),1] = \mathcal{H}(1)[\mathfrak{L}\Psi(x,t,\wp) + \mathcal{S}(x,t) + \aleph\Psi(x,t,\wp)] = 0, \tag{29}$$

Here in equation (26),$\Psi(x,t,\wp)$ is unknown function and clearly it holds that when$\wp = 0$ then $\Psi(x,t,0) = v_0(x,t)$ and when $\wp = 1$ then$\Psi(x,t,1) = v(x,t)$

Generally we can write

$$\Psi(x,t,\wp,C_i) = v_0(x,t) + \textstyle\sum_{k\geq 1} v_k(x,t,C_i)\wp^k \ \ ,\ i = 1,2,3,\ldots m, \tag{30}$$

To find the component of unknown function$v(x,t)$, we Substitute equation (30) into equation (26) collecting the same power of $\wp$ and putting each coefficient of $\wp$equal to zero. So the differential equation is solved by using the given boundary conditions, we get the value of$v_0(x,t)$, $v_1(x,t,C_1) and v_2(x,t,C_2)$ as

First order problem

$$\mathfrak{L}(v_1(x,t)) = C_1\aleph_0\big(v_0(x,t)\big), \qquad \mathfrak{B}\big(v_1(\mathrm{x},\mathrm{t})\big) = 0, \tag{31}$$

Second order problem

$$\mathfrak{L}(v_2(x,t)) - \mathfrak{L}(v_1(x,t)) = C_2\aleph_0\big(v_0(x,t)\big) + C_1\big[\mathfrak{L}(v_1(x,t)) + \aleph_1\big(v_0(x,t), v_1(x,t)\big)\big],\ \ \mathfrak{B}\big(v_2(\mathrm{x},\mathrm{t})\big) = 0, \tag{32}$$

Similarly kth order problem

$$\mathfrak{L}\big(v_k(x,t)\big) - \mathfrak{L}\big(v_{k-1}(x,t)\big) = C_k\aleph_0\big(v_0(x,t)\big) + \textstyle\sum_{i=1}^{k-1} C_i\ \big[\mathfrak{L}\big(v_{k-i}(x,t)\big) + \aleph_{k-i}\big(v_0(x,t), v_1(x,t),, v_{k-i}(x,t)\big)\big], \mathfrak{B}\big(v_k(\mathrm{x},\mathrm{t})\big) = 0, k = 2,3,4 \ldots, \tag{33}$$

The general solution of equation (26) is of the form

$$v^n = v_0(x,t) + \textstyle\sum_{k-1}^{n} v_k(x,t,C_i), \tag{34}$$

By combining equations (26) and (34) we obtained the residual as

$$\mathcal{R}\big(x,t,C_j\big) = \mathfrak{L}(v(x,t,C_i)) + \mathcal{S}(x,t) + \aleph(v(x,t,C_i)), \tag{35}$$

Several methods are used to find the optimal value of auxiliary constants C_i , $i = 1,2,3 \ldots$, that is Galerkin's Method, Ritz Method, Least Squares Method and Collocation Method. Here in the present problem we introduced the Method of Least Squares, given by

$$\mathfrak{H}(C_1, C_2, C_3, \ldots, C_i) = \int_a^b \mathcal{R}^2(x, C_1, C_2, C_3, \ldots, C_i)dx, \tag{36}$$

The value of a and b are depending on the domain of problem.

The auxiliary constants C_i , $i = 1,2,3, \ldots . n$ can be identified from the given conditions

$$\frac{\partial\mathfrak{H}}{\partial C_1} = \frac{\partial\mathfrak{H}}{\partial C_2} = \frac{\partial\mathfrak{H}}{\partial C_3} = \cdots = \frac{\partial\mathfrak{H}}{\partial C_i} = 0, \tag{37}$$

The auxiliary constants C_i can also be finding from the other methods. At the last by using the values of auxiliary constants $C_1, C_2, C_3, \ldots, C_i$, the approximate solution is well determined.

V THE ADM SOLUTION OF FIRST PROBLEM

In operator form equation (8) can be written as

$$L_x v(x,t) = \frac{\partial v}{\partial t} - \alpha\frac{\partial}{\partial t}\left(\frac{\partial^2 v}{\partial x^2}\right) - 6\beta\left(\frac{\partial v}{\partial x}\right)^2\left(\frac{\partial^2 v}{\partial x^2}\right) + S_t + Mv, \tag{38}$$

Using the inverse operator, ${L_x}^{-1} = \iint dxdx$on equation (38) we get

$${L_x}^{-1}L_x v(x,t) = {L_x}^{-1}\left(\frac{\partial v}{\partial t} + S_t\right) - \alpha{L_x}^{-1}\left[\frac{\partial}{\partial t}\left(\frac{\partial^2 v}{\partial x^2}\right)\right] - 6\beta{L_x}^{-1}\left[\left(\frac{\partial v}{\partial x}\right)^2\left(\frac{\partial^2 v}{\partial x^2}\right)\right] + M{L_x}^{-1}v \tag{39}$$

$$v(x,t) = \Psi - \alpha{L_x}^{-1}\left[\frac{\partial}{\partial t}\left(\frac{\partial^2 v}{\partial x^2}\right)\right] - 6\beta{L_x}^{-1}\left[\left(\frac{\partial v}{\partial x}\right)^2\left(\frac{\partial^2 v}{\partial x^2}\right)\right] + M{L_x}^{-1}v, \tag{40}$$

Since ADM is a series method then the solution v and nonlinear term can be expressed as

$$v(x,t) = \textstyle\sum_{n=0}^{\infty} v_n(x,t), \tag{41}$$

$$\frac{\partial}{\partial t}\left(\frac{\partial^2 v}{\partial x^2}\right) = \sum_{n=0}^{\infty} A_n, \quad \left(\frac{\partial v}{\partial x}\right)^2 \left(\frac{\partial^2 v}{\partial x^2}\right) = \sum_{n=0}^{\infty} B_n, \tag{42}$$

$$\sum_{n=0}^{\infty} v_n(x,t) = \Psi - \alpha L_x^{-1}\left(\sum_{n=0}^{\infty} A_n\right) - 6\beta L_x^{-1}\left(\sum_{n=0}^{\infty} B_n\right) + M L_x^{-1} \sum_{n=0}^{\infty} v_n(x,t), \tag{43}$$

From equation (43) the adomian polynomials A_n and B_n in component from are given

$$A_0 = \frac{\partial}{\partial t}\left(\frac{\partial^2 v_0}{\partial x^2}\right), \qquad B_0 = \left(\frac{\partial v_0}{\partial x}\right)^2 \left(\frac{\partial^2 v_0}{\partial x^2}\right), \tag{44}$$

$$A_1 = \frac{\partial}{\partial t}\left(\frac{\partial^2 v_1}{\partial x^2}\right), \qquad B_1 = 2\left(\frac{\partial v_0}{\partial x}\right)\left(\frac{\partial v_1}{\partial x}\right)\left(\frac{\partial^2 v_0}{\partial x^2}\right) + \left(\frac{\partial v_0}{\partial x}\right)^2 \left(\frac{\partial^2 v_1}{\partial x^2}\right), \tag{45}$$

$$A_2 = \frac{\partial}{\partial t}\left(\frac{\partial^2 v_2}{\partial x^2}\right), \quad B_2 = \left(\frac{\partial v_1}{\partial x}\right)^2 \left(\frac{\partial^2 v_0}{\partial x^2}\right) + 2\left(\frac{\partial v_0}{\partial x}\right)\left(\frac{\partial v_2}{\partial x}\right)\left(\frac{\partial^2 v_0}{\partial x^2}\right) + 2\left(\frac{\partial v_0}{\partial x}\right)\left(\frac{\partial v_1}{\partial x}\right) + \left(\frac{\partial^2 v_1}{\partial x^2}\right) + \left(\frac{\partial v_0}{\partial x}\right)^2 \tag{46}$$

$$v_0(x,t) + v_1(x,t) + \cdots = g(x,t) - \alpha L_x^{-1}(A_0 + A_1 + \cdots) - 6\beta L_x^{-1}(B_0 + B_1 + \cdots) + M(v_0(x,t) + v_1(x,t) + \cdots), \tag{47}$$

The components of velocity profile are obtained by comparing both side of equation (47)

Zero component problem:

$$v_0(x,t) = \Psi = L_x^{-1} S_t, \tag{38}$$

Solution of zero component problem using boundary conditions given in equation (9) is:

$$v_0(x,t) = (1 + \mathrm{Cos}[t\omega]) - \left(1 + \mathrm{Cos}[t\omega] + \frac{S_t}{2}\right)x + \left(\frac{S_t}{2}\right)x^2, \tag{39}$$

First component problem:

$$v_1(x,t) = M L_x^{-1} v_0 + L_x^{-1}\left(\frac{\partial v_0}{\partial t}\right) - \alpha L_x^{-1}(A_0) - 6\beta L_x^{-1}(B_0), \tag{40}$$

Solution of first component problem usingboundary conditions given in equations (9) is:

$$v_1(x,t) = \left[\frac{M}{3}\left(\frac{S_t}{8} - 1 - \mathrm{Cos}[t\omega]\right) + \frac{1}{3}\omega \mathrm{Sin}[t\omega] + 3\beta S_t\left(1 + \frac{1}{2} + 2\mathrm{Cos}[t\omega] + \frac{1}{2}\mathrm{Cos}[2t\omega]\right) + \beta {S_t}^2\left(1 + \mathrm{Cos}[t\omega] + \frac{S_t}{4}\right)\right]x + \left[\frac{M}{2} + M\mathrm{Cos}[t\omega] - \frac{1}{2}\omega \mathrm{Sin}[t\omega] - 3\beta S_t\left(1 + \frac{1}{2} + 2\mathrm{Cos}[t\omega] + \frac{1}{2}\mathrm{Cos}[2t\omega]\right) - 3\beta {S_t}^2\left(1 + \mathrm{Cos}[t\omega] - \frac{S_t}{4}\right)\right]x^2 + \left[\beta {S_t}^2(2 + 2\mathrm{Cos}[t\omega] + S_t) - \frac{1}{6}\left(M + M\mathrm{Cos}[t\omega] - \omega \mathrm{Sin}[t\omega] + \frac{MS_t}{2}\right)\right]x^3 + \frac{S_t}{2}\left[\frac{M}{12} - \frac{\beta {S_t}^3}{2}\right]x^4, \tag{41}$$

Second component problem:

$$v_2(x,t) = M L_x^{-1} v_1 + L_x^{-1}\left(\frac{\partial v_1}{\partial t}\right) - \alpha L_x^{-1}(A_1) - 6\beta L_x^{-1}(B_1), \tag{42}$$

The solution of second component of velocity distribution using boundary conditions in equations (9)is too large.So derivation are given up to first order while,graphical solutions are given up to second order.

VI THE OHAM SOLUTION OF FIRST PROBLEM

We write equation (8) in standard form of OHAM and study zero, first and second component problems

Zero component problem:

$$\frac{\partial^2 v_0(x,t)}{\partial x^2} = S_t, \tag{43}$$

Solution of zero component problem using boundary condition in equation (9) is

$$v_0(x,t) = (1 + \mathrm{Cos}[t\omega]) - \left(1 + \mathrm{Cos}[t\omega] + \frac{S_t}{2}\right)x + \left(\frac{S_t}{2}\right)x^2, \tag{44}$$

First component problem:

$$\frac{\partial^2 v_1(x,t)}{\partial x^2} = -S_t - c_1 S_t - \mathrm{M} c_1 v_0 + c_1\left(\frac{\partial v_0}{\partial \mathrm{t}}\right) + \frac{\partial^2 v_0}{\partial x^2} + c_1\left(\frac{\partial^2 v_0}{\partial x^2}\right) + 6\beta\left(\frac{\partial v_0}{\partial x}\right)^2\left(\frac{\partial^2 v_0}{\partial x^2}\right) + \alpha\frac{\partial}{\partial \mathrm{t}}\left(\frac{\partial^2 v_0}{\partial x^2}\right), \tag{45}$$

Solution of first component problem using boundary condition in equation (9) is

$$v_1(x,t) = c_1\left[2\mathrm{Cos}\left[\frac{t\omega}{2}\right]^2\left(\frac{M}{3} - \beta S_t^2\right) - \omega \mathrm{Cos}\left[\frac{t\omega}{2}\right]\mathrm{Sin}\left[\frac{t\omega}{2}\right]\left(\frac{2}{3} - \alpha\right) - 6\beta \mathrm{Cos}[t\omega]S_t - \frac{3}{2}\beta \mathrm{Cos}[2t\omega]S_t - \frac{MS_t}{24} - \frac{9}{2}\beta S_t - \frac{\beta S_t^3}{4}\right]x + c_1\left[\omega \mathrm{Cos}\left[\frac{t\omega}{2}\right]\mathrm{Sin}\left[\frac{t\omega}{2}\right](1 + \alpha) + 6\beta \mathrm{Cos}[t\omega]S_t + \frac{3}{2}\beta \mathrm{Cos}[2t\omega]S_t + 6\beta \mathrm{Cos}\left[\frac{t\omega}{2}\right]^2 S_t^2 - S_t M \mathrm{Cos}\left[\frac{t\omega}{2}\right]^2 + \frac{9\beta S_t}{2} + \frac{3\beta S_t^3}{4}\right]x^2 + c_1\left[\mathrm{Cos}\left[\frac{t\omega}{2}\right]^2\left(\frac{M}{3} - 4\beta S_t^2\right) - \frac{1}{3}\omega \mathrm{Cos}\left[\frac{t\omega}{2}\right]\mathrm{Sin}\left[\frac{t\omega}{2}\right] + \frac{MS_t}{12} - 4\beta \mathrm{Cos}[\frac{t\omega}{2}]^2 S_t^2 - \beta c_1 S_t^3\right]x^3 + c_1\left[\frac{\beta S_t^3}{2} - \frac{MS_t}{24}\right]x^4, \tag{46}$$

The solution of second component of velocity distribution is too large. So derivation are given up to first order while, graphical solutions are given up to second order.

The optimal value of c_j, j = 1,2,3 ... are find by using the residual

$$R = L(v(x,t,c_j)) + T(v(x,t,c_j)) + S(v(x,t,c_j)), \tag{47}$$

The value of c_j for the velocity components $v_0(x,t), v_1(x,t,c_1) and v_2(x,t,c_2)$ are

$$c_1 = -0.0481075191 \quad , c_2 = -0.0082765719$$

VII FORMULATION OF THE SECOND PROBLEM

In this problem the belt is only oscillating and not moving upward. The remaining assumptions are same as in previous problem. The fluid layer is draining down the belt due to gravity. Therefore, the stock number in equation (8) positively mentioned.
Boundary condition for electrically conducting drainage problem is:

$$v(0,t) = V\cos(\omega t) \quad , \quad \frac{\partial v(\delta,t)}{\partial x} = 0 \quad , \tag{48}$$

Due to downward flow of fluid film equation (8) reduced as.

$$\frac{\partial v}{\partial t} = \frac{\partial^2 v}{\partial x^2} + \alpha\frac{\partial}{\partial t}\left(\frac{\partial^2 v}{\partial x^2}\right) + 6\beta\left(\frac{\partial v}{\partial x}\right)^2\left(\frac{\partial^2 v}{\partial x^2}\right) + S_t - Mv, \tag{49}$$

Boundary conditions are

$$v(0,t) = \cos(\omega t) \quad , \quad \frac{\partial v(1,t)}{\partial x} = 0, \tag{50}$$

VIII THE ADM SOLUTION OF SECOND PROBLEM

Using adomian decomposition method (ADM) on equation (49).The adomian polynomials (34-36) are same for both lifting and drainage problems. The velocity components are
Zero component problem:

$$v_0(x,t) = \Psi = -L_x{}^{-1}S_t, \tag{51}$$

Solution of Zero component problem using boundary conditions in equation (50):

$$v_0(x,t) = \mathrm{Cos}[t\omega] - \left(\mathrm{Cos}[t\omega] + \frac{S_t}{2}\right)x - \left(\frac{S_t}{2}\right)x^2, \tag{52}$$

First component problem:

$$v_1(x,t) = ML_x{}^{-1}v_0 + L_x{}^{-1}\left(\frac{\partial v_0}{\partial t}\right) - \alpha L_x{}^{-1}(A_0) - 6\beta L_x{}^{-1}(B_0), \tag{53}$$

Solution of first component drainage problem using boundary condition in equation (50):

$$v_1(x,t) = \left[\frac{1}{3}\omega\mathrm{Sin}[t\omega] - \frac{3}{2}\beta\mathrm{Cos}[2t\omega]S_t + \mathrm{Cos}[t\omega]\left(\beta S_t^2 - \frac{M}{3}\right) - \frac{MS_t}{24} - \frac{3\beta S_t}{2} - \frac{\beta S_t^3}{4}\right]x + \left[\mathrm{Cos}[t\omega]\left(\frac{M}{2} - 3\beta S_t^2\right) - \frac{1}{2}\omega\mathrm{Sin}[t\omega] + \frac{3}{2}\beta\mathrm{Cos}[2t\omega]S_t + \frac{3\beta S_t}{2} + \frac{3\beta S_t^3}{4}\right]x^2 + \left[\frac{1}{6}\omega\mathrm{Sin}[t\omega] + \frac{MS_t}{12} + \mathrm{Cos}[t\omega]\left(2\beta S_t^2 - \frac{M}{6}\right) - \beta S_t^3\right]x^3 + \left[\frac{\beta S_t^3}{2} - \frac{MS_t}{24}\right]x^4, \tag{54}$$

The solution of second component of velocity distribution using boundary conditions in equation (50) is too large. So derivation are given up to first order while, graphical solutions are given up to second order.

IX THE OHAM SOLUTION OF SECOND PROBLEM

We write equation (49) in standard form of OHAM and study zero, first and second component problems
Zero component problem:

$$\frac{\partial^2 v_0(x,t)}{\partial x^2} = -S_t \tag{55}$$

Solution of zero component problem using boundary condition in equation (50) is

$$v_0(x,t) = \mathrm{Cos}[t\omega] + \left[\frac{S_t}{2} - \mathrm{Cos}[t\omega]\right]x - \left[\frac{S_t}{2}\right]x^2, \tag{56}$$

First component problem:

$$\frac{\partial^2 v_1(x,t)}{\partial x^2} = \mathrm{M}c_1 v_0 - S_t - c_1 S_t + c_1\left(\frac{\partial v_0}{\partial \mathrm{t}}\right) + \frac{\partial^2 v_0}{\partial x^2} - c_1\left(\frac{\partial^2 v_0}{\partial x^2}\right) - 6\beta\left(\frac{\partial v_0}{\partial x}\right)^2\left(\frac{\partial^2 v_0}{\partial x^2}\right) - \alpha\frac{\partial}{\partial \mathrm{t}}\left(\frac{\partial^2 v_0}{\partial x^2}\right), \tag{57}$$

Solution of first component problem using boundary condition in equation (50) is

$$v_1(x,t) = c_1\left[\left[\frac{1}{3}\omega\mathrm{Sin}[t\omega] - \frac{1}{3}M\mathrm{Cos}[t\omega] - 3\beta\mathrm{Cos}[t\omega]^2 S_t + \beta\mathrm{Cos}[t\omega]S_t^2 - \frac{MS_t}{24} - \frac{\beta S_t^3}{4}\right]x + \left[\mathrm{Cos}[t\omega]\left(\frac{M}{2} - 3\beta S_t^2\right) - \frac{\omega}{2}\mathrm{Sin}[t\omega] + 3\beta\mathrm{Cos}[t\omega]^2 S_t + \frac{3}{4}\beta S_t^3\right]x^2 + \left[\mathrm{Cos}[t\omega]\left(2\beta S_t^2 - \frac{M}{6}\right) + \frac{\omega}{6}\mathrm{Sin}[t\omega] + \frac{MS_t}{12} + -\beta S_t^3\right]x^3 + \left[\frac{\beta S_t^3}{2} - \frac{MS_t}{24}\right]x^4\right], \tag{58}$$

The solution of second component of velocity distribution is too large. So derivation are given up to first order while, graphical solutions are given up to second order
The values of auxiliary constants for the drainage velocity profile are
$c_1 = 0.2664104869 \quad , \; c_2 = -0.0766985178,$

Table 1: Comparison of OHAM and ADM for the lift velocity profile, by taking, $\omega = 0.2, \alpha = 0.02, S_t = 0.5, M = 0.2, \beta = 0.5, t = 20,$

x	*OHAM*	*ADM*	*Absolute Error*
0.0	0.3463563791	0.3463563791	0
0.1	0.2898555823	0.2894507102	4.0487×10^{-4}
0.2	0.2381055645	0.2382704429	1.6487×10^{-4}
0.3	0.1911574650	0.1921874560	1.0299×10^{-3}
0.4	0.1490565622	0.1508473362	1.7907×10^{-3}
0.5	0.1118420991	0.1140937150	2.2516×10^{-3}
0.6	0.0795471302	0.0819022260	2.3550×10^{-3}
0.7	0.0521983909	0.0543240816	2.1256×10^{-3}
0.8	0.0298161893	0.0314392700	1.6230×10^{-3}
0.9	0.0124143199	0.0133193725	9.0505×10^{-4}
1.0	1.2567×10^{-17}	-4.168×10^{-15}	4.1808×10^{-15}

Table 2: Comparison of OHAM and ADM for the drainage velocity profile, bytaking, $\omega = 0.2, \alpha = 0.02, S_t = 0.3, M = 0.2, \beta = 0.5; t = 10,$

x	*OHAM*	*ADM*	*Absolute Error*
0.0	−0.41614683	−0.41614683	0
0.1	−0.36141565	−0.36067480	7.4082×10^{-4}
0.2	−0.30962505	−0.30838045	1.2445×10^{-3}
0.3	−0.26077336	−0.25926007	1.5132×10^{-3}
0.4	−0.21485445	−0.21329333	1.5611×10^{-3}
0.5	−0.17185765	−0.17044089	1.4167×10^{-3}
0.6	−0.13176762	−0.13064261	1.1250×10^{-3}
0.7	−0.09456421	−0.09381617	7.4804×10^{-4}
0.8	−0.06022249	−0.05985633	3.6615×10^{-4}
0.9	−0.02871263	−0.02863471	7.7919×10^{-5}
1.0	3.057×10^{-17}	-8.72×10^{-17}	1.1785×10^{-16}

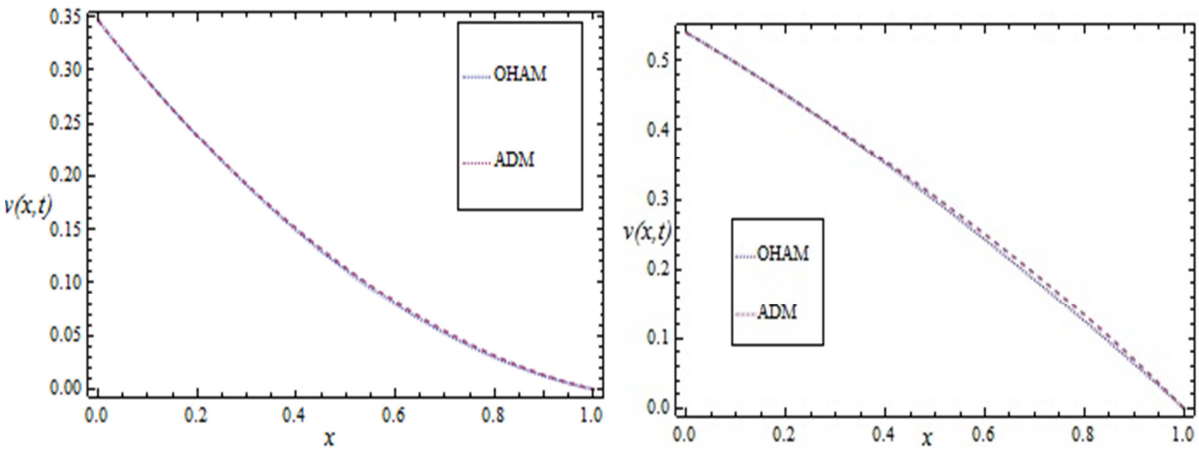

$c_1 = -0.0481075191, c_2 = -0.0082765719 c_1 = 0.2664104869, c_2 = -0.0766985178$

Figure 3: Comparison of OHAM and ADM methods for lift velocity profile (on left) by taking $\omega = 0.2, \alpha = 0.02, S_t = 0.5, M = 0.2, \beta = 0.5; t = 20$(on right) drainage velocity profile by taking $\omega = 0.2, \alpha = 0.02, S_t = 0.3, M = 0.2, \beta = 0.5; t = 10.$

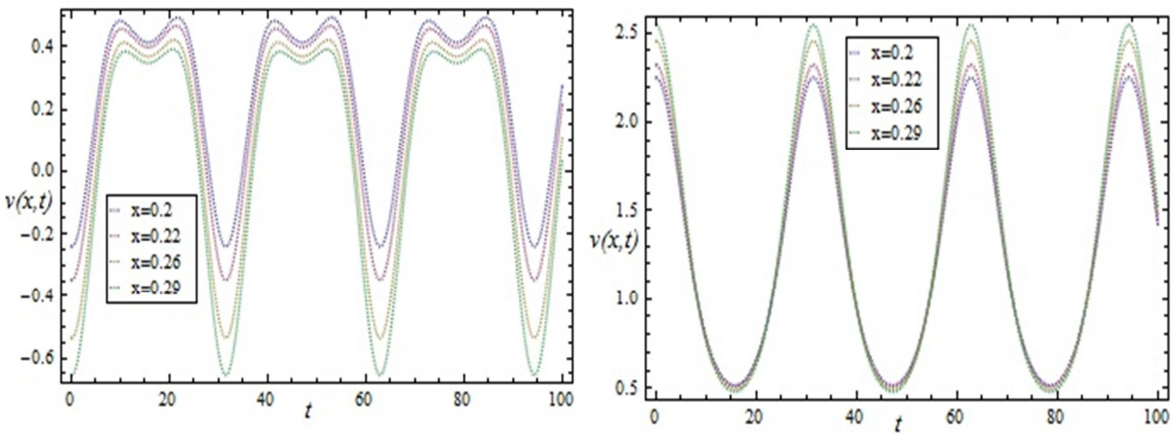

Figure4:Lift velocity distribution of fluid (on left)and drainage velocity distribution of fluid (on right) by taking $\omega = 0.2$, $\alpha = 0.02$, $S_t = 0.5$, $M = 0.9$, $\beta = 0.5$.

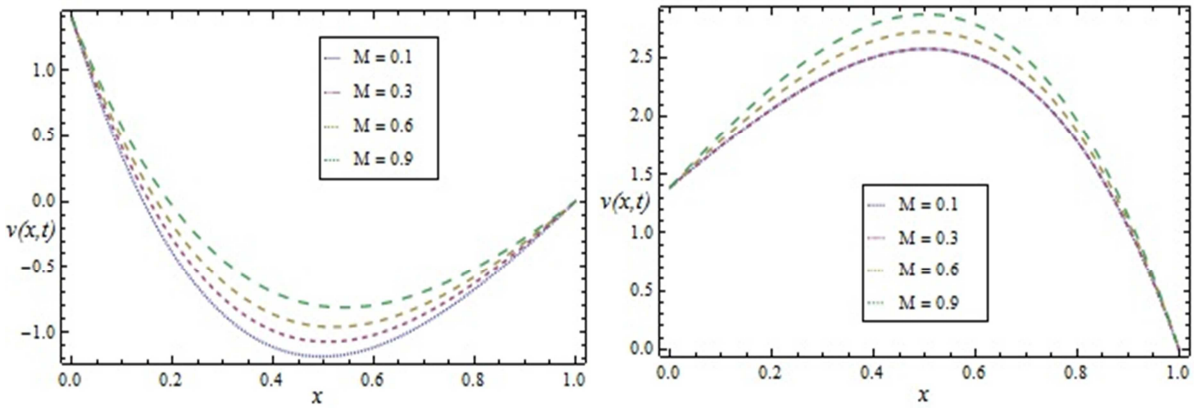

Fig 5: Effect of the Magnetic parameter M on theLift velocity profile (on left)and drainage velocity profile (on right) by taking $S_t = 0.5, \alpha = 0.2, \beta = 0.5, \omega = 0.02, t = 10$

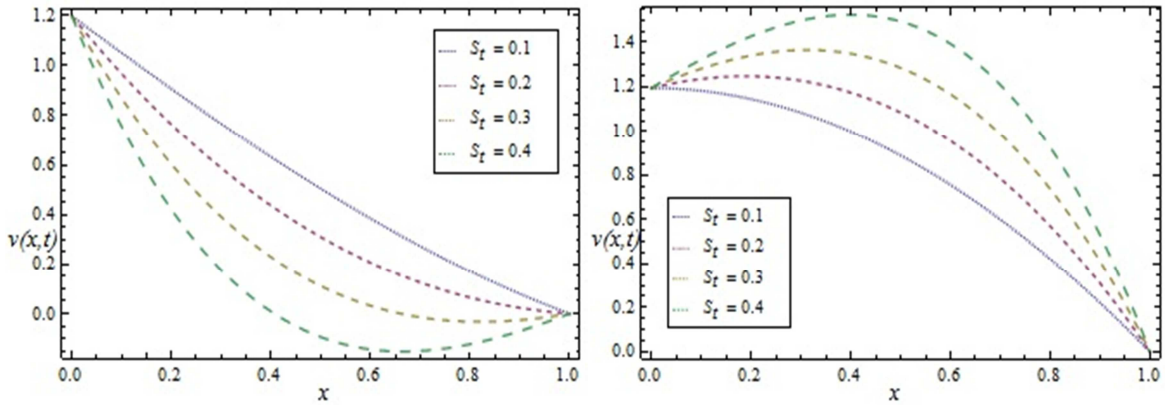

Fig6: Effect of the stock number on the Lift velocity (on left)and drainage velocity profile (on right) by taking $M = 0.4, \alpha = 0.02, \beta = 0.5, \omega = 0.02, t = 10$.

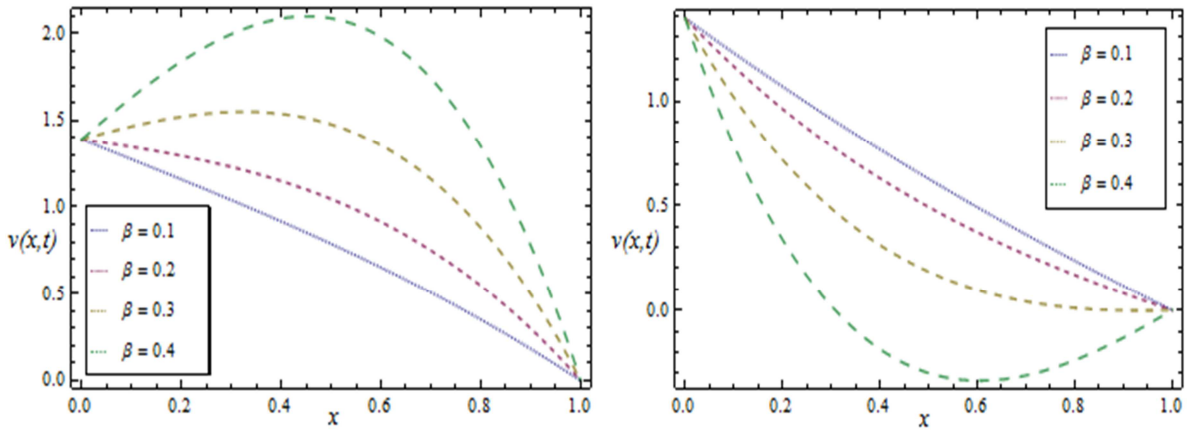

Fig 7: Effect of the Non-Newtonian parameter βon theLift velocity (on left)and drainage velocity profile (on right) by taking $M = 0.9, \alpha = 0.2, S_t = 0.5, \omega = 0.02, t = 10$

X RESULTS AND DISCUSSION

In the present work we study the non Newtonian unsteady thin film MHD flow on a vertical moving and oscillating belt. From the model non-linear partial differential equations with boundary conditions are obtained and solved by using ADM and OHAM methods. The comparison of solutions and the graphical representations of the lifting and drainage velocities profile are shown. The effect of Magnetic parameter M, non-Newtonian parameter β, the stock number $S_t$for both lift and drainage velocity profiles is discussed. In tables 1-2 the numerical comparison of OHAM and ADM methods at different time interval for lifting and drainage velocity profile are show and find the absolute error. From the tables we observe that the absolute error between ADM and OHAM are directly related to the time level. Fig 1-2 shows geometry of the problem. Fig. 3shows the

comparison of ADM and OHAM solutions for both lifting and drainage velocity distribution by taking different values of the parameters. Fig. 4 are plotted in order to observe the influence of different time level on the velocity profile. Figs. 5-7 are plotted in order to see the effect of $M, S_t and\ \beta$ on the lift and drainage velocity profile. Fig. 5givesthe effect of magnetic parameter M on lifting and drainage velocity profile. The magnetic parameter M has a direct relation for the lift velocity profile while the drainage velocity field decreases by increasing$M$. Fig. 6 shows the effect of stoke number S_t on lift and drainage velocity field. The fig show that the lift velocity decreases when S_t increases while in drainage case the stoke number S_t have a direct variation for the velocity profile. It shows that increase in stock number causes the fluid motion due to its opposite direction. Fig. 7 gives the effect of Non-Newtonian parameter β on the lifting and drainage velocity. The fig show that the lift velocity profile decreases by increasing β while in drainage case the Non-Newtonian parameter β have a direct variation for the drainage velocity profile.

XI CONCLUSION

The unsteady thin film flow of an MHD third grade fluid on a vertical oscillating belt has been discussed. The constitutive equation governing the flow of a third grade fluid for lifting and drainage problemsare solved analytically by using Adomian decomposition method and Optimal Homotopy Asymptotic Method. The numerical and graphical comparison of ADM and OHAM are discussed. The effect of stoke numberS_t, non-Newtonian parameter β, magnetic parameter $M$and other parameters involved in the problem are discussed and result are displayed in graph to observe the effect of these parameters on lifting and drainage velocity profile. It is concluded that velocity increases as the magnetic parameter$M$increases in lifting case while velocity decreases as magnetic parameter increases in drainage case and velocity decreases as the non- Newtonian parameter increases in lifting case while in drainage case direct variation between them similarly the velocity decreases as the stoke number increases in lifting case while in drainage case direct variation between them.

REFERENCES

[1] Bird, R. B. ,Armstrong , R. C. and Hassager,O. (1987), Dynamics of polymericliquids, 1 Fluid Mechanics second edition, John Wiley & Sons, Inc.

[2] Siddiqui,A. M. , Ahmed, M. and Ghori,Q. K. (2007),Thin film flow of non-Newtonian fluids on a moving belt, Chaos, Solitons& Fractals, 33(3): 1006–1016.

[3] Sajid, M. Hayat,T.,Asghar, (2007), Comparison between HAM and HPM solutions of thin film flows of non-Newtonian fluids on a moving belt, Nonlinear Dyn., 50:, pp. 27–35.

[4] Khan, N.,Mahmood, T. (2012), The influence of slip condition on the thin film flow of a third order fluid, International Journal of Nonlinear Science, 13(1):105–116.

[5] Ariel, P. D. (2003), Flow of a third grade fluid through a porous flat channel, Int. J. of Eng. Sci., 41(11):1267-1285.

[6] Sahoo. B, Do. Y. (2010), Effects of slip on sheet-driven flow and heat transfer of a third grade fluid past a stretching sheet, Int. Commun. Heat Mass Transfer , 37:1064–1071.

[7] Islam, S., shah, R. A.,Siddiqi, A.M.andHaroon,T. (2011), Optimal homotopyasymptotic method solution of unsteady second grade fluid in wire coating analysis, J. KSIAM, 15(3):201–222.

[8] Islam, S., Shah, R.A., Ali, I. and Zeb, M. (2011), Optimal homotopy asymptotic method for thin film flows of a third grade fluid, Journal of Advanced Research in Scientific Computing , 3(2):1-14.

[9] Gul, T., Shah, R.A. , Islam, S., Arif, M. (2013), MHD Thin film flows of a third grade fluid on a vertical belt with slip boundary conditions, Journal of Applied Mathematics , 2013:1-14.

[10] Khan, I., Ali, F., Samiulhaq, Mustapha, N. and Shafie, S. (2012), Unsteady Magnetohydrodynamic Oscillatory Flow of Viscoelastic Fluids in a Porous Channel with Heat and Mass Transfer, Journal of the Physical Society of Japan 81 (2012) 064402.

[11] Khan, I., Ali, F. and Shafie, S. (2014), closed form solutions for unsteady free convection flow of a second grade fluid over an oscillating vertical plate, PLoSONE, 9(2):1-15.

[12] Khan, I., Fakhar, K., Kara A. H. and Sajid, M. (2011),On the Computation of Analytical Solutions of an Unsteady Magnetohydrodynamics Flow of a Third Grade Fluid with Hall Effects, Computer and Mathematics with Applications,61(4):980-987.

[13] Ali, M., Ahmad, F., Hussain, S. (2014), Numerical Solution of MHD Flow of Fluid and Heat Transfer over Porous Stretching Sheet, *J. Basic. Appl. Sci. Res.*, 4(5):146-152.

[14] Idrees, M., Islam, S.,Haq, S. and Islam, S. (2010), Application of the Optimal Homotopy Asymptotic Method to squeezing flow, Computers and Mathematics with Applications, 59 : 3858-3866.

[15] Yongqi, W. & Wu, W. (2007), unsteady flow of a fourth grade fluid to an oscillating plate, International Journal of non-linear Mechanics, 42(3): 432-441.

[16] Aiyesimi, Y. M., Okedyao, G. T. and Lawal, W.O. (2013), Unsteady MHD thin film flow of a third grade fluid with heat transfer and no slip boundary condition down an Inclined plane,International Journal of Scientific & Engineering Research, 4(6):420–432.

[17] Alam, M. K.,Siddiqui, A. M., Rahim, M. T. and Islam, S. (2012),Thinfilm flow of magnetohydrodynamic (MHD) Johnson-Segalman fluid on vertical surfaces using the Adomian decomposition method, Applied Mathematics and Computation, 219:3956–3974.

[18] Ajadi. S. O. (2009), Analytical solutions of unsteady oscillating particulate viscoelastic fluid between two parallel walls, International Journal of Nonlinear Science, 9(2):131-138.

[19] Liao, S.J. (2003), On the analytic solution of magnetohydrodynamic flows of non-Newtonian fluids over a stretching sheet,J.Fluid Mech.,488:189–212.

[20] Gamal,M. A. (2011), Effect of Magnetohydrodynamics on thin films of unsteady micropolar fluid through a porous medium, Journal of Modern Physics, 2: 1290-1304.

[21] Adomian, G. (1994), Solving Frontier Problems of Physics: the Decomposition Method, Kluwer Academic Publishers.

[22] Adomian, G. (1990), a review of the decomposition method and some recent results for nonlinear equations,MathematicalandComputer Modeling, 13(7):17–43.

[23] Wazwaz, A. M. (2005), Adomian decomposition method for a reliable treatment of the Bratu-type equations, AppliedMathematicsand Computation, 166(3):652–663.

[24] Wazwaz, A. M.(2005), Adomian decomposition method for a reliable treatment of the Emden-Fowler equation, AppliedMathematicsand Computation, 161(2):543–560.

[25] Duan, J.S.,Rach, R. (2011), A new modification of the Adomian decomposition method for solving boundary value problems for higher order nonlinear differential equations, Appl. Math. Comput.,218(15):4090–4118.

[26] Hussain, S. and Ahmad, F. (2014), Numerical Solution of MHD Flow over a Stretching Sheet. J. Basic. Appl. Sci. Res., 4(3): 98-102

[27] Hussain, S. and Ahmad, F. (2014), Effects of Heat Source/Sink on MHD Flow of Micropolar Fluids over a Shrinking Sheet with Mass Suction. J. Basic. Appl. Sci. Res., 4(3): 207-215.