J. Appl. Environ. Biol. Sci., 4(12)108-114, 2014

ISSN: 2090-4274
Journal of Applied Environmental and Biological Sciences
www.textroad.com

Fitness Cycling Device with Graphical User Interface Based on IEEE 802.15.4 Transceiver for Real Time Monitoring

Mohamad Taib Miskon, Zairi Ismael Rizman, Wan Ahmad Khusairi Wan Chek, Fadhli Dzul Hilmi Mohd Fauzi

Faculty of Electrical Engineering
Universiti Teknologi MARA (Terengganu), 23000 Dungun, Terengganu, Malaysia

Received: August 31, 2014
Accepted: November 28, 2014

ABSTRACT

Cycling, on a regular basis can help people to release stress, achieve ideal weight and develop their fitness. However, outdoor cyclers have to compete with other road users as most of the roadways are not designed to be biker's friendly, and thus increasing the risk of accident. Stationary exercise bikes, on the other hand, are not really preferable as user could easily get bored in the same indoor scenery surroundings. Therefore, in order to nurture cycling as part of healthy lifestyle among people, a fitness cycling device was proposed in this paper. The device employs a similar concept of indoor bicycle trainer in which a bicycle was modified into training equipment with the capability to be operated in both indoor and outdoor environment. Besides, it offers a virtual gaming experience to motivate and entertain the user while improving their fitness level. The device used dynamo as an electrical energy generator to charge the main circuit that control the operation of the game system. By means of infra-red (IR) sensor, the speed of the bicycle was measured and calculated using a microcontroller called Arduino Fio. Later, the information was transmitted to a laptop or monitor via wireless link. The wireless communication was established via a pair of IEEE 802.15.4 X-Bee Pro modules which can perform data transmission within 1000m radius. By using open source software known as Processing, a graphical user interface was developed at the receiving end to provide the virtual gaming experience. Inspired by the arcade gaming concept, a coin slot was developed and the user needs to insert an artificial coin in order to start cycling. Within a limited time given, the player has to achieve certain target speed and distance. It is hoped that the device could help to promote healthy lifestyle, green technology and at the same time experience joyful moment.
KEYWORDS: Xbee, Arduino Fio, Processing, Graphical User Interface, Cycling, Green Technology.

INTRODUCTION

With the advancement of modern technology, people tend to care less about their diets and lifestyle. Most people do not consume proper diet, lack of physical exercise, spending too much time on television, excessive use of gadgets like smart phones, computer games and internet surfing. Cycling has become one of the easiest way to improve fitness among people. Some people believed riding as a therapy for personal enjoyment and it helps to build strength, stamina and muscle [7]. However, outdoor cyclers have to compete with other road users as most of the roadways are not designed to be biker's friendly and thus, increasing the risk of accident. Stationary exercise bikes, on the other hand, are not really preferable as user could easily get bored in the same indoor scenery surroundings. A possible solution to avoid people from losing their interest to exercise is to develop a game-based platform that incorporates high level of appealing excitement in the training process. Therefore, current works focus on the development of a game-like bicycle exercise platform in order to encourage more people to exercise and to promote healthy lifestyle [8].

Developer in [1] for example had created a stationary cycle trainer using an ordinary bicycle attached to an indoor training aid to replicate bike riding experience. Recorded footages from various bicycle rides around North Yourkshire were displayed in front of the bicycle using a projector in order to provide more realistic scenery. Besides, riders can also choose to use different video recordings allowing them to feel various riding adventures.

A head-to-head stationary bike racing game was proposed by [10]. In order to facilitate the rider with a sensation of speed, a dynamic visual display was projected near the rider and the faster the cyclist, the faster the environment graphic will change. Players will be given 60 seconds to ride and the one with the farthest recorded distance will be considered as a winner. Each bicycle was attached to a modified roller and an Arduino was used as a central server to relay speed data obtained from the bicycle to an open framework application which drove the

Corresponding Author: Zairi Ismael Rizman, Faculty of Electrical Engineering, Universiti Teknologi MARA (Terengganu), 23000 Dungun, Terengganu, Malaysia, E-mail: zairi576@tganu.uitm.edu.my

dynamic graphical projection. The instantaneous changing environment in a game-like interface helps to encourage the racers and make the exercise session more interesting [8, 10].

Wireless connectivity plays an important role to relay fitness data to central processor [2, 5, 10]. Developer in [1] makes use of the existing software and hardware platform on the smartphone application to establish connection between the equipment. Besides, IEEE 802.15.4 networks are also seen as a viable candidate for connecting such equipment [3, 4]. In [6] designed a wearable acceleration-based pedometer to estimate the amount of physical activity. Simultaneous activity monitoring systems were developed via wireless local area network (WLAN) to monitor multiple users exercising freely within a coverage area. Although huge potential benefits are widely recognized, the application of wireless communication technologies in healthcare systems brings more challenging issues including energy-efficiency [5]. Thus, this paper proposed a game-based fitness cycling device, utilizing IEEE 802.15.4 networks, with the capability to generate electrical energy in order to promote both healthy lifestyle and green technology among people.

METHODOLOGY

The block diagram illustrated in Figure 1 provides general overview of the proposed system. The transmitting end consists of a bicycle, a microcontroller, a speed sensor, a voltage generator and a transceiver module (XBee Pro) that support IEEE 802.15.4 standard. The speed sensor used was based on infra-red (IR) transmitter and receiver which detect the rotation of the bicycle wheel and later feed the information to the microcontroller for speed calculation. The receiving end consists of another XBee Pro module, and a laptop or a projector for display purpose. The microcontroller was connected to the laptop via Universal Serial Bus (USB) port.

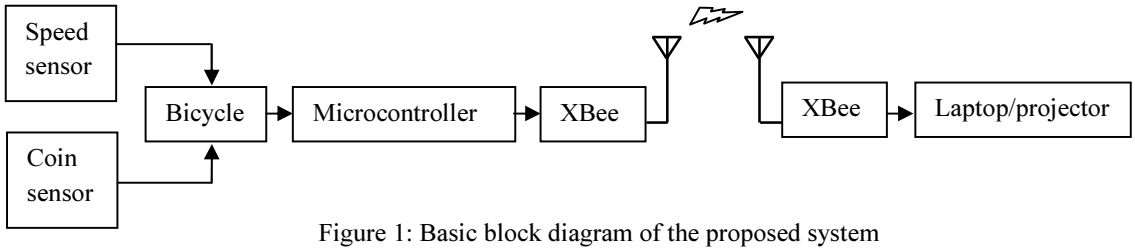

Figure 1: Basic block diagram of the proposed system

Circuit Design

The data processing unit for the proposed system was developed using Arduino Fio microcontroller as illustrated in Figure 2. The board is based on the ATmega328P processor. There are 14 programmable ports for digital input and output (I/O) which include 6 ports that support Pulse Width Modulation (PWM) output, 8 ports for analog input, a reset button, a built in resonator and pin headers. The tiny board is also equipped with an on board Lithium Polymer (LiPO) battery charger and an XBee socket at the bottom of the board. Additionally, users can also upload new program conveniently via wireless link between the board and the computer by using XBee transmitter and receiver [11, 12].

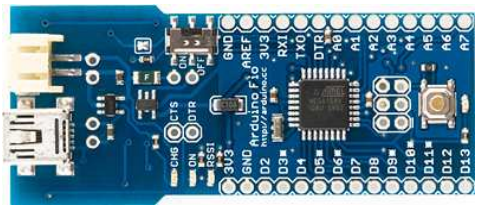

Figure 2: Arduino Fio board [12]

The circuit in Figure 3 depicts the connection of the components used in this project which include a pair of IR sensor, three switches, light-emitting diodes (LED) and a comparator. The signal obtained from the IR sensors was fed to the controller board through the digital pin 2. Other digital pins such as pin 4, 7 and 12 were used to read switches connected to the bike to detect the presence of coin and also the presence of user riding the bicycle.

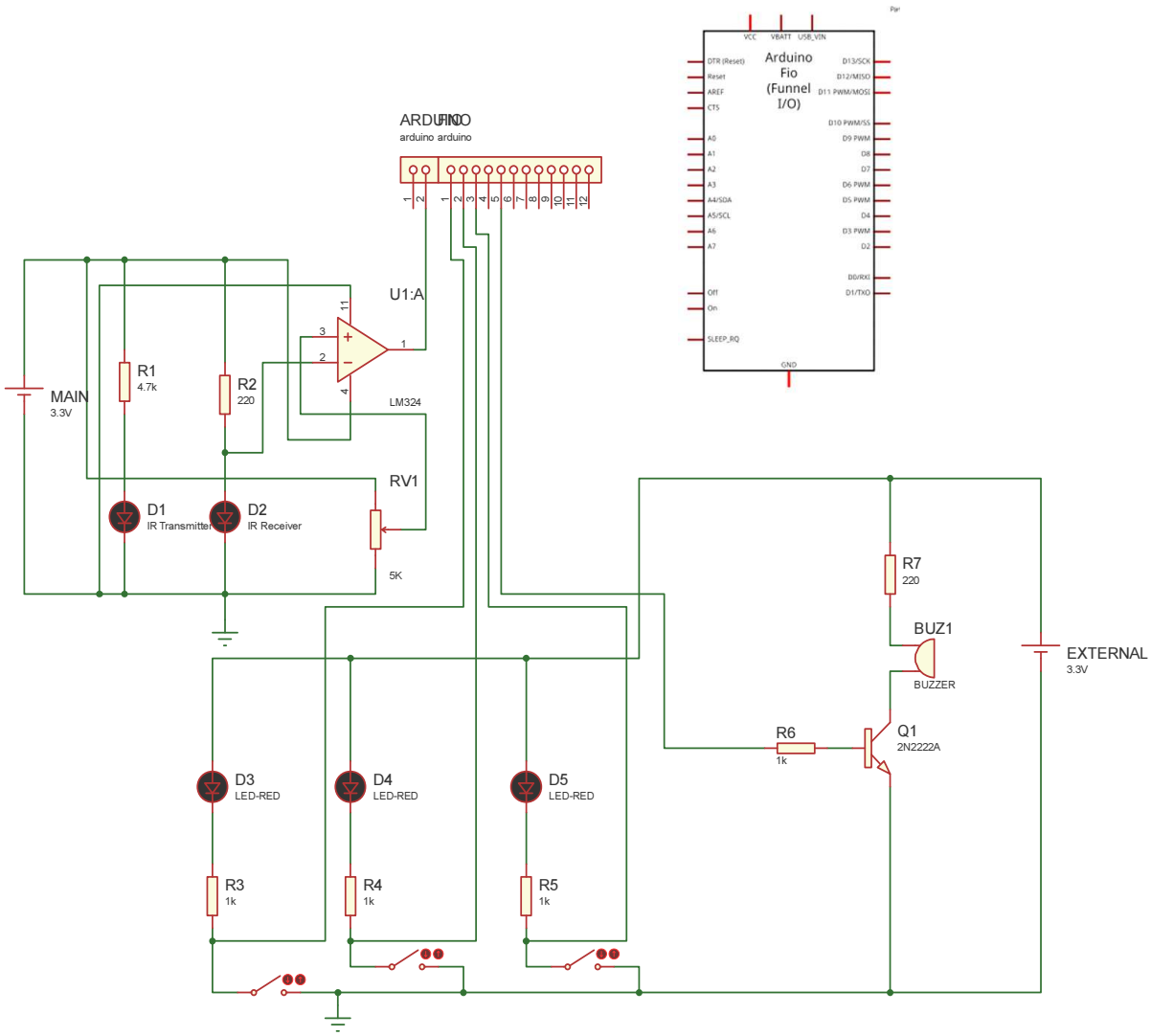

Figure 3: Sensor Circuit

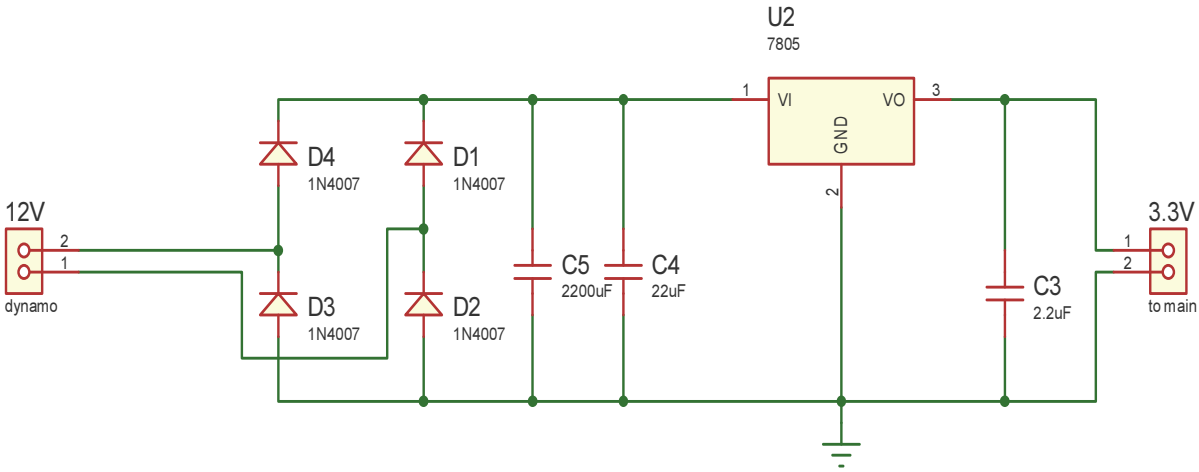

Figure 4: The power supply circuit

The circuit in Figure 4 illustrates the power supply circuit for the project. It is a combination of a full wave rectifier circuit and a voltage regulator circuit. As the bicycle wheel spins, an amount of voltage will be generated by the generator attached to it. Next, the fluctuating voltage produced was fed to the rectifier circuit to eliminate the negative cycle of the voltage. As a result, the alternating current (AC) supply produced by the generator is converted into a direct current (DC) supply that is suitable to be used to power up the microcontroller and other components.
A voltage regulator, LM7805 was used to regulate and stabilize the output voltage of the supply circuit.

IEEE 802.15.4 Network Configuration

Figure 5 shows the wireless module used in this project. It can be configured using X-CTU software developed by Digi International Inc. The wireless module was connected to the computer via USB to UART converter so that the device can be detected as a virtual communication (COM) port to enable the interfacing.

Figure 5: IEEE 802.15.4 XBee Pro modules [9]

X-CTU software comes with a Test/Query test function to check the readiness of the XBee module. A small window will appear to show that the device has been successfully connected with the laptop and the configuration set up can be carried on. Next, the terminal tab is selected as shown in Figure 6. To start communicating with the module, a "+++" character is entered and user need to wait for a reply from the module. If there is no communication problem, the module will reply an "OK" message. Next, user need to type ATRE, BD6, ID1234, MY0, DLFFFF, D33, IC8, RR3, RO10 and WR commands. For each command, there should be an "OK" reply from the module indicating that the configurations are correct. The same procedures are carried out to set up another XBee module. At the terminal menu, user need to type "+++" character, wait for an "OK" reply, and proceed with the following commands; ATRE, BD6, ID1234, MY1, DL0, D35, IU0, IAFFFF, RO10 and WR.

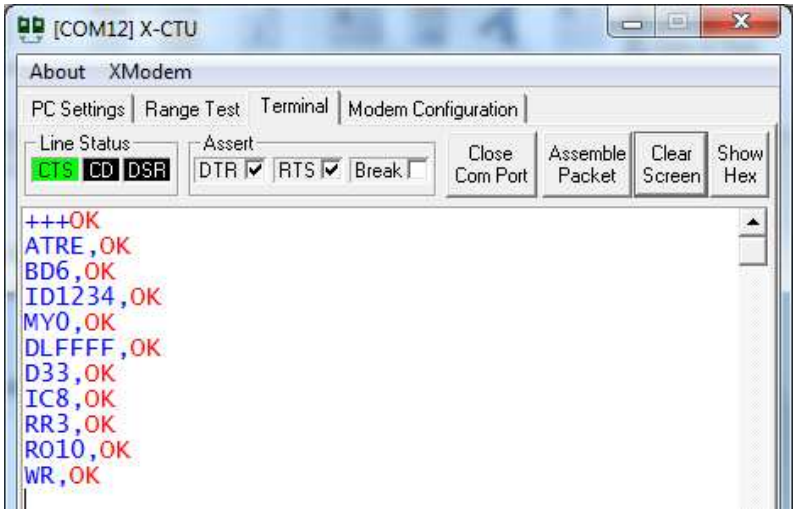

Figure 6: Terminal menus for configuration process

Graphical User Interfacing Design

Free and open source software, known as Processing was used to develop the graphical user interfacing design in this project. The software has been widely used by students, researchers and designers all over the world for learning, prototyping and production [13]. It can also be used for data visualization and software prototyping. Figure

7(b) shows the code snippet used to capture serial activity on the laptop. The captured data will be interpreted and represented in a graphical way as shown in Figure 7(a). Existing functions embedded in the software such as fill(), rect(), size(), ellipse(), quad() and many more help to make the design process easier and faster. In addition, many libraries are also created by contributors around the world to support features like networking, serial communication, file export, sound and video interfacing.

(a) (b)

Figure 7: GUI and program snippet

RESULTS AND DISCUSSION

Figure 8 shows the proposed fitness cycling device. It contains a sensor to detect the rider, so that the game can be activated. Besides, there are also coin slot, IR sensor to measure the speed, the generator attached at the rear wheel and the main controller circuit board. It is also equipped with a portable bicycle stand so it can be used in both indoor and outdoor environment. To increase the flexibility of the system, any ordinary bicycle can be used to integrate with the circuitry. The only thing that needs to be done is to have all the circuits involved attached to it, a laptop with installed software, and a bicycle stand. Several tests have been conducted to assess the proposed device. The speed sensor is capable of detecting up to 1000rpm within a specific time. In the aspect of data transmission range, the bicycle (transmitter) and the laptop (receiver) can be separated up to 200 meter in indoor environment. While in outdoor environment, both ends can be separated up to 900 meter in line-of-sight (LOS) condition that enables user to move freely within the detection range. The allocation of time given for each user will depends on the amount of the artificial coin inserted into the coin slot. For example, two minutes will be given for each coin been slot in. Once the allocated time ends, a notification buzzer will be activated and the timer will be stopped. The program inside the controller board can also be adjusted conveniently through wireless link created with the XBee modules.

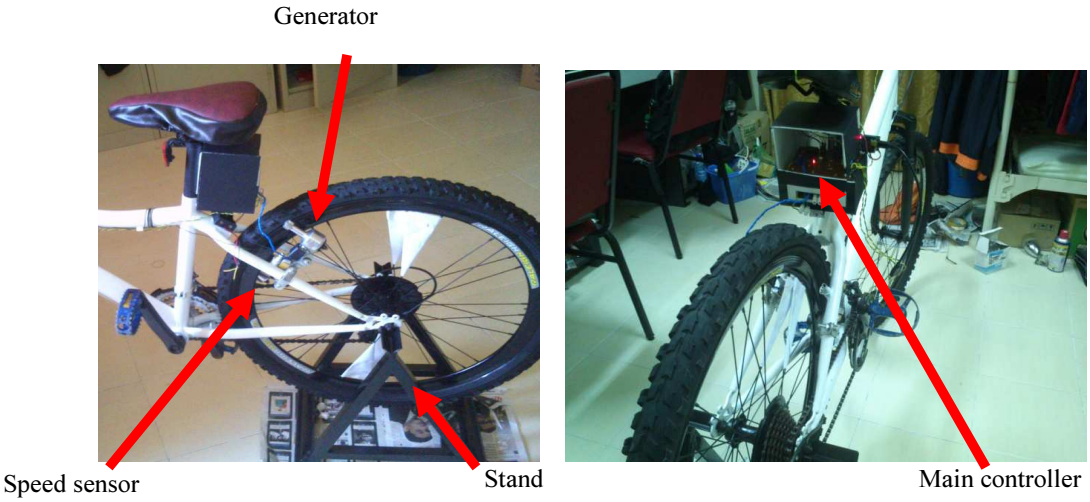

Figure 8: The proposed fitness cycling device

CONCLUSION

In this paper, a game-based fitness cycling device has been proposed and discussed. Inspired by [1, 10], this device is created with additional on board power generator to promote green technology, longer data transmission distance and can be operated both indoor and outdoor set-up. Instead of using IEEE 802.15.4 Xbee module, it is also possible to use Bluetooth or Wi-Fi module to create wireless link between the bicycle and the display. Despite an impressive results obtained from the project, there is still room for improvement to make it even better. Future works should focus on developing multiple cycling units being monitored by one base station with the riders competing to each other and giving them the sensation of a social gaming experience in this unique and healthy activity. In conclusion, it is hoped that this project will help to promote healthy lifestyle among people by offering more element of entertainment to an ordinary cycling exercise.

ACKNOWLEDGEMENT

The authors would like express gratitude for the kind supports, guidance and help from colleagues and many individuals in developing this project.

REFERENCES

1. Robin, F., 2013. En-route cycle station displays impressive digital fitness. Retrieved from http://wlvdigital.wordpress.com/2013/08/09/en-route-cycle-station-displays-impressive-digital-fitness/.
2. Rahman, M., B. Carbunar and M. Banik, 2013. Fit and vulnerable: Attacks and defenses for a health monitoring device. arXiv preprint arXiv:1304.5672. Retrieved from http://arxiv.org/abs/1304.5672.
3. Borowik, B. and J. Wojnarowski, 2011. Human–Machine Interface Based on ZigBee Technique for Monitoring Vibration of Dynamic Object. In the Proceedings of the 2011 13th IFToMM World Congress, pp: 1-4.
4. Shin, Y.-S., K.-W. Lee and J.-S. Ahn, 2011. Exploring the Feasibility of Differentiating IEEE 802.15. 4 Networks to Support Health-Care Systems. Journal of Communications and Networks, 13 (2): 132-141.
5. Shen, X., J. Misic, N. Kato, P. Langenorfer and X. Lin, 2011. Emerging Technologies and Applications of Wireless Communication in Healthcare. Journal of Communications and Networks, 13 (2): 81-85.
6. Tsunoda, H., H. Nakayama, K. Ohta, A. Suzuki, H. Nishiyama, R. Nagatomi and Y. Nemoto, 2011. Development of a WLAN Based Monitoring System for Group Activity Measurement in Real-Time. Journal of Communications and Networks, 13 (2): 86-94.

7. J. Howard, 2010. Mastering cycling. Human Kinetics.
8. Billis, A.S., E.I. Konstantinidis, C. Mouzakidis, M.N. Tsolaki, C. Pappas and P.D. Bamidis, 2010. A Game-Like Interface for Training Seniors' Dynamic Balance and Coordination. In the Proceedings of the 2010 XII Mediterranean Conference on Medical and Biological Engineering and Computing, pp: 691-694.
9. XBee Datasheet. XBee-PRO™ OEM RF Modules. Product Manual v1. xAx-802.15 4.
10. Red Paper Heart. 2012. The cycling classic: A head to head bike race for urbandaddy. Retrieved from http://redpaperheart.com/work/cyclingclassic.
11. Alimi, S., S. Shue and J.M. Conrad, 2014. Design and Implementation of an Open-Source Wireless Sensor Network Development Platform. In the Proceedings of the 2014 SOUTHEASTCON, pp: 1-2.
12. Arduino, 2014. Arduino Fio. Retrieved from http://arduino.cc/en/Main/ArduinoBoardFio.
13. Reas, C. and B. Fry, 2012. Processing.org. Processing.org 3, no. (06).