J. Appl. Environ. Biol. Sci., 5(12S)846-854, 2015

ISSN: 2090-4274
Journal of Applied Environmental and Biological Sciences
www.textroad.com

Optimal geometry design of single layer lamella domes using charged system search algorithm

Mohsen Kooshkbaghi [1], Panam Zarfam[2] and Omid Fereydoni [3]

[1]Department of Civil Engineering, Islamic Azad University, Science and Research Branch, Tehran, Iran.
[2]Assistant Professor, Department of Civil Engineering, Islamic Azad University, Science and Research Branch, Tehran, Iran.
[3]Department of Civil Engineering, Islamic Azad University, Science and Research Branch, Urmia, Iran

Received: July24, 2015
Accepted: September 31, 2015

ABSTRACT

Domes are lightweight and elegant structures that provide cost effective solutions to cover large areas. They are also exceptionally suitable structures for covering places where minimum interference from internal supports are required. The behavior of latticed domes is nonlinear due to change of geometry under external loads. This is due to the imperfections arising either from the manufacturing process and/or from the construction of the structure.
In this paper, the optimum topological design problem of geometrically nonlinear single layer latticed dome is considered. The design problem is formulated such that the total number of rings, the height of the crown, and the steel pipe section designations required for the member groups in the dome are treated as design variables. The serviceability and strength requirements are considered in the design problem of lamella domes as specified in LRFD-AISC. The optimum solutions of the design problem are obtained using the charged system search algorithm. Also, the charged system search (CSS) algorithm is inspired by the Coulomb and Gauss laws of electrostatics in physics and the governing laws of motion from Newtonian mechanics.

KEYWORDS: Charged system search, Repetitive structures, Dome optimization, Discrete design.

1. INTRODUCTION

Structural systems, which enable the designers to cover large spans, have always been a challenging task for structural engineers. Beginning with the worship places in the early times, sports stadiums, assembly halls, exhibition centers, swimming pools, shopping centers and industrial buildings have been typical examples of structures with large unobstructed areas nowadays [1]. Dome structures are the most preferred type of large spanned structures. Domes have been of a special interest in the sense that they enclose large areas without intermediate supports.

Although dome structures are economical in terms of consumption of constructional materials compared to the conventional forms of structures [1], a more lightweight design can be obtained using optimization methods. Optimization of an engineering design is an improvement of a proposed design that results in the best properties for minimum cost. Structural optimization can be categorized as:

• Sizing optimization in which the geometry and topology of the structure remain unchanged but cross sectional properties are optimized [2-14].

• Geometry optimization which determines the optimum location of the joints in the structure in addition to the size of members [15-18].

The optimal design of geometry has been investigated far less due to its complexity, despite the fact that the optimization of topology and geometry greatly improves the design [19, 21].

In general, optimization techniques used in structural problems can be categorized into classical and heuristic search methods. The disadvantages of traditional optimization methods such as complex derivatives and the large amount of required memory have forced researchers to employ heuristic approaches for solving optimization problems [22]. Many of the heuristic approaches are inspired by the natural phenomena. These phenomena include the biological evolutionary process, animal behavior, or the physical processes.

Recently, the authors proposed a new optimization approach, so-called Charged System Search [23], which utilizes a number of Charged Particle (CP). These particles affect each other based on their fitness values and separation distances considering the governing laws of Coulomb and Gauss from electrical physics and the governing laws of motion from the Newtonian mechanics. This paper develops the CSS method to perform an optimum geometrical design of lamella domes.

A simple procedure is developed to calculate the joint coordinates and element constructions in order to determine the configuration of the domes. The nodal coordinates are calculated using a simple relationship. The joints are divided into two types considering the symmetry, and then the elements are easily determined. The serviceability and strength requirements are considered in the design problems as specified in LRFD-AISC [24]. The algorithm takes into account the nonlinear response of the dome due to effect of axial forces on the flexural stiffness of members.

In this paper, unlike the previous studies on the dome optimization [17, 25] which consider only size or geometry optimization of the domes by determining the number of rings and the cross-sectional areas of the elements, a method is developed that has the ability to determine the element configurations and the number of elements automatically during the optimization process, this number being considered as a design variable.

In this study optimum topology design algorithm based on charged system search method is developed for a lamella dome. The algorithm determines the optimum number of rings, the optimum height of crown and sectional designations

Corresponding author: Mohsen Kooshkbaghi, Department of Civil Engineering, Islamic Azad University, Science and Research Branch, Tehran, Iran. Moh3n.baghi@gmail.com

for the members of a lamella dome under the external loads. The steel pipe sections list of the LRFD-AISC (Load and resistance Factor Design-American Institute of Steel Constitution) are adopted for the cross sections of dome members. The algorithm developed selects appropriate sections from this list such that the weight of dome becomes the minimum. The optimum topology algorithm presented is based on CSS (charged system search) algorithm. Which one of the recent meta-heuristic optimization techniques is the charged system search (CSS), inspired by the governing laws of electrostatics in physics and the governing laws of motion from the Newtonian mechanics. The CSS utilizes a number of solution candidates which are called charged particles (CPs). Each CP is treated as a charged sphere and it can exert an electrical force on the other agents (CPs) according to the Coulomb and Gauss laws of electrostatics. The resultant force acting on each CP creates an acceleration in consideration of Newton's second law. Finally, utilizing Newtonian mechanics, the position of each CP is determined at any time based on its previous position, velocity and acceleration in the space. In this study, the CSS is used to determine the optimum design of rotational repetitive structures and the optimal analysis is used to calculate the optimum displacement and stress.

In this paper, like the previous studies on the dome optimization [17, 25] which consider only size or geometry optimization of the domes by determining the number of rings and the cross sectional areas of the elements, a method is developed that has the ability to determine the element configurations and the number of elements automatically during the optimization process, this number being considered as a design variable.

If the real behavior these structures are intended to be obtained. Furthermore, the instability of domes is also required to be checked during the nonlinear analysis. In some the optimum design algorithms developed for these structures recently, the nonlinear elastic behavior of latticed domes is considered. It is shown that consideration of nonlinear behavior in the optimum design of these elegant structures does not only provide more realistic results, it also produces lighter structures. In more recent studies the topology and the geometry of a dome structure are treated as design variables and the design algorithms presented determines the optimum number of rings, the optimum height of the crown as well as the optimum pipe cross sectional designations for dome members.

2. Automated Computation Of Joint Coordinates

The algorithm presented treats the rise of dome as design variable. As a result, each individual in the population has a different height for its crown. This in turn necessitates computation of joint coordinates for each joint in the dome as a function of the height of crown. For this purpose a procedure is developed that carries out joint numbering, member incidences and the computation of joint coordinates automatically. The input data required for the procedure is the diameter D and the height h of the dome and the total number of rings nr in the dome and nn is total number of joints on each ring.

Figure 1(a and b) shows the plan and elevation of a lamella dome considered in this study. The joints are placed on the rings as shown in Figure. 1(b). The joint at the crown is numbered as number 1 and the joint at the intersection point of x-axis and the first ring is numbered as joint number 2. Also, The x, y, and z coordinates joint at the crown is 0 , 0 and h , respectively. This joint is on the radius of the dome which coincides with the x axis. The joint number at the intersection of any ring and the x-axis is determined as [Jr1 + (r-1). nn] where r is the ring number and Jr1 is the first joint number of each ring. It is worthwhile to mention that all of the first joints of the rings are located on the intersection points of that ring and the x-axis. Every other joint on rings is numbered in a regular sequence. Member incidences are arranged in similar manner. First member is taken as the one which is on the x axis and connects joint 1 to joint 2. This process is repeated for each ring and the member incidences for all the members in the dome are determined and stored in an array.

Computation of x, y, and z coordinates of a joint on the dome requires the angle between the line that connects the joint under consideration to joint 1 and the x-axis as shown in Figure 1 (b). This angle can be calculated for joint i shown in the same Figure as:

For all rings with odd number, we have:

$$\theta_j = 360\,(n_j - J_{r1})\,/n_n \tag{1}$$

Also For all rings with even number, we have:

$$\theta_j = 180\,(\,2(n_j - J_{r1})+1\,)\,/n_n \tag{2}$$

Where $\boldsymbol{\alpha_i}$ is shown in Figure 3(b), **r** is the ring number that joint **i** is placed on it and $\mathbf{J}_{r1}$ is the first joint number on the ring number **r** which is on the x-axis.

The $\mathbf{x_i}$ and $\mathbf{y_i}$ and $\mathbf{z_i}$ coordinates of joint **i** can be calculated as:

$$\mathbf{x_j} = r_i\,.\,\mathrm{Cos}\,(\theta_j) \qquad j=1,\ldots,n_n \tag{3}$$

$$\mathbf{y_j} = r_i\,.\,\mathrm{Sin}\,(\theta_j) \qquad j=1,\ldots,n_n \tag{4}$$

$$\alpha = \cos^{-1}\left(\frac{R-h}{R}\right)$$

$$r_i = R.\sin(i.\beta) \qquad i=1,\ldots,n_r \quad \text{and} \quad \beta = \alpha/n_r \tag{5}$$

$$z_i = \sqrt{\left(R^2 - x_i^2 - \left(\sqrt{R-h}\right)\right)} \quad \text{or} \quad z_i = R.\cos(i.\beta) \quad i=1,\ldots,n_r$$

Where R is the radius of the semi-circle shown in Figure. 1(a), which is computed from $(D^2 + 4h^2)/(8h)$. Use of above relationships for each joint makes it possible to obtain the coordinates of joints in the dome automatically.

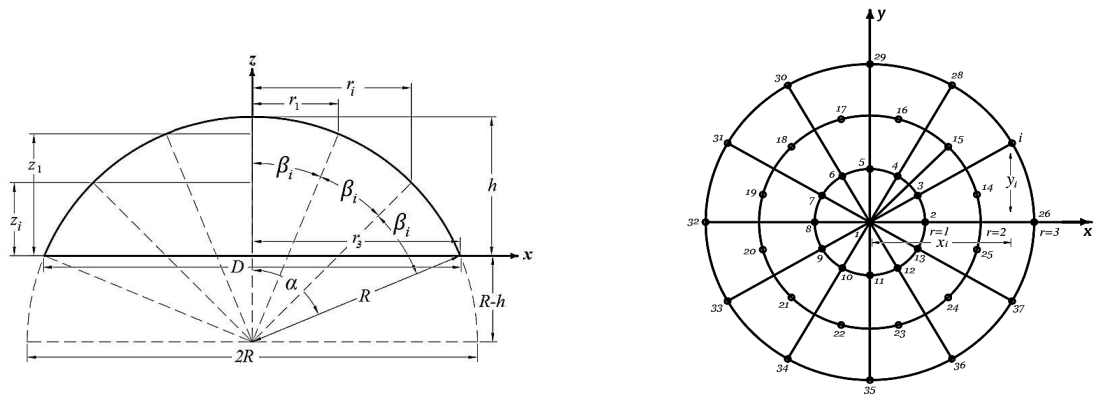

(a) Elevation (b) Plan.

Fig 1. Automated computation of joint coordinates in a lamella dome.

3. Statement of Optimum Design of Single Layer Domes

Optimal design of dome structures consists of finding optimal cross-sections for elements, optimal rise for the crown, and the optimum number of rings under determined loading conditions. The allowable cross sections are considered as 37 steel pipe sections. Where the abbreviations ST, EST, and DEST stand for standard weight, extra strong, and double extra strong, respectively.

These sections are taken from AISC-LRFD [24] which is also utilized as the code of design. The aim of optimizing the dome weight is to find a set of design variables that has the minimum weight satisfying certain constraints. The mathematical form of the objective function can be expressed as:

$$\textit{find} \quad \{x\} = [\, A_i \,,\, h_i \quad \mathbf{i} = 1{:}\, n_g \,] \,,\, n_r \,,\, n_n \qquad (6)$$

$$h_i \in \{h_{min} \,,\, h_{min} + \delta h \,,\, h_{max}\}$$

$$\textit{to minimize} \qquad W(\{x\}) = \rho \,.\, \sum_{i=1}^{n_i} A_i \, L_i \qquad (7)$$

where {x} is a vector containing the design variables of the elements; **h** is the variable of the crown height; nr is the total number of rings which is taken as 3, 4 or 5 as shown in Fig. 1; **A** is the i th allowable discrete value for the design variables (37 pipe sections taken from LRFD-AISC). $\mathbf{A}_i$ is cross-sectional area of member i chosen between $\mathbf{A}_{min}$ and $\mathbf{A}_{max}$; min is lower bound and max is upper bound; h_{max} and δh are the permitted minimum, maximum and increased amounts of the crown height, which in this paper are taken as 1.00, 8.00 and 0.25 m, respectively; $\mathbf{n_g}$ is the number of design variables or the number of size groups; W({**x**}) is the weight of the structure; L_i is the length of member ; **ρ** is the is the material mass density and $\mathbf{n_m}$ is the total number of elements.

Similarly, topological optimization of lamella dome structures can be considered as finding optimal sections for elements, optimal height for the crown, optimum number of rings and optimum number of the elements. Since the number of elements available in each ring is equal to the number of nodes related to that ring, therefore once the number of ring nodes as the design variables is determined, the topological optimum design will be achieved. In the other hand, for the lamella domes the number of nodes in each ring is considered as the number of joints in the first ring (n_n) multiplied by the number associated with that ring. Figure 2 shows the different forms of lamella domes when n_n is altered.

The AISC-LRFD specification and the drift limitations are considered as constraints for these structures. The modulus of elasticity for the steel is taken as 205 kN/mm^2. The diameter of the domes is selected as 20 m. These structures are considered to be subjected to only the equipment loading of 500 kN at their crown. The limitations imposed on the joint displacements are 28 mm in the all direction for the nodes. The constraint conditions for single layer domes are briefly explained in the following:

(a) Displacement constraint:

$$\delta_i \leqslant \delta_i^{max} \qquad i = 1, 2, \ldots, n_m \qquad (8)$$

(b) Interaction formula constraints:

for $\frac{P_u}{\varphi_c P_n} \geqslant 0.2$

$$\frac{P_u}{\varphi_c P_n} + \frac{8}{9}\left(\frac{M_{ux}}{\varphi_b M_{nx}} + \frac{M_{uy}}{\varphi_b M_{ny}}\right) \leqslant 1 \qquad (9)$$

for $\frac{P_u}{\varphi_c P_n} < 0.2$

$$\frac{P_u}{2\varphi_c P_n} + \left(\frac{M_{ux}}{\varphi_b M_{nx}} + \frac{M_{uy}}{\varphi_b M_{ny}}\right) \leqslant 1 \qquad (10)$$

$$P_n = F_y \,.\, A_g \,.\, \varphi_t \qquad \varphi_t = 0.9 \qquad (11)$$

$$P_n = F_{cr} \,.\, A_g \,.\, \varphi_c \qquad \varphi_c = 0.85 \qquad (12)$$

$$F_{cr}=\begin{cases}\left(0.658^{F_y/F_e}\right)F_y & K.L/r \leqslant 4.71\sqrt{E/F_y}\\ (0.877)F_e & K.L/r > 4.71\sqrt{E/F_y}\end{cases} \qquad F_e=\pi^2 E/(K.L/r)^2$$

(c) Shear constraint:

$$V_u \leqslant \varphi_v V_n \tag{13}$$

Where δ_i and δ_i^{max} are the displacement and allowable displacement for the i th node; n_n is the number of nodes; n_m is the total number of members and K is the effective length factor taken equal to 1; P_u is the required strength (tension or compression); P_n is the nominal axial strength (tension or compression); A_g is the cross sectional. V is the nominal strength in shear; and represents the resistance factor for shear (0.90).

Here, an appropriate penalty function is utilized to handle the constraints. In utilizing penalty functions, if the constraints are between the allowable limits, the penalty is zero; otherwise the amount of penalty is obtained by dividing the violation of allowable limit to the limit itself. After analyzing a structure, the deflection of each node and the stress in each member are obtained. These values are compared to the allowable limits to calculate the penalty functions [10] as:

$$\begin{cases}\delta_i^{min} < \delta_i < \delta_i^{max} & \Rightarrow \Phi_\delta^{(i)} = 0\\ \delta_i^{min} > \delta_i \quad \text{or} \quad \delta_i^{max} < \delta_i & \Rightarrow \Phi_\delta^{(i)} = \dfrac{\delta_i \quad \delta_i^{min/max}}{\delta_i^{min/max}} \qquad i = 1, 2, \ldots, m\end{cases} \tag{14}$$

$$\begin{cases}\sigma_i^{min} < \sigma_i < \sigma_i^{max} & \Rightarrow \Phi_\sigma^{(i)} = 0\\ \sigma_i^{min} > \sigma_i \quad \text{or} \quad \sigma_i^{max} < \sigma_i & \Rightarrow \Phi_\sigma^{(i)} = \dfrac{\sigma_i - \sigma_i^{min/max}}{\sigma_i^{min/max}} \qquad i = 1, 2, \ldots, n\end{cases} \tag{15}$$

In this method, the aim of the optimization is redefined by introducing the cost function as:

$$f_{cost}(\{x\}) = \left(1 + \varepsilon_1 . \sum \Phi\right)^{\varepsilon_2} . W(\{x\}) \tag{16}$$

Where Φ_σ and Φ_δ are the value of stress penalty and the nodal deflection penalty, respectively. The constant ε_1 and ε_2 are selected considering the exploration and the exploitation rate of the search space. Here, ε_1 is set to unity, ε_2 is selected in the way that it decreases the penalties and reduces the cross-sectional areas. Thus, in the first steps of the search process ε_2 is set to 1.5, and ultimately increased to 3 [10].

4. Charged System Search Algorithm

The Charged System Search (CSS) algorithm is based on the Coulomb and Gauss laws from electrical physics and the governing laws of motion from the Newtonian mechanics [27]. This algorithm can be considered as a multi-agent approach, where each agent is a Charged Particle (CP). Each CP is considered as a charged sphere with radius a, having a uniform volume charge density and is equal to:

$$q_i = \frac{fit(i) - fit_{Worst}}{fit_{Best} - fit_{Worst}} \qquad i = 1,2,.., N \tag{17}$$

Where fit_{Best} and fit_{Worst} are the Best and the Worst fitness of all the particles; fit (i) represents the fitness of the agent i , and N is the total number of CPs.

CPs can impose electric forces on the others. The kind of the forces is attractive, and its magnitude for the CP located in the inside of the sphere is proportional to the separation distance between the CPs, and for a CP located outside the sphere is inversely proportional to the square of the separation distance between the particles :

$$F_j = q_j \sum_{i, i \neq j} \left(\frac{q_i}{a^3} r_{ij} . i_1 + i_2 \frac{q_i}{r_{ij}^2}\right) p_{ij} (X_i - X_j) \ , \quad \begin{cases} j = 1, \ldots, N \\ i_1 = 1 \ , \ i_2 = 0 \Leftrightarrow r_{ij} < a \\ i_2 = 1 \ , \ i_1 = 0 \Leftrightarrow r_{ij} \geqslant a \end{cases} \tag{18}$$

Where $\mathbf{F}_j$ is the resultant force acting on the j th CP; r_{ij} is the separation distance between two charged particles which is defined as follows:

$$r_{ij} = \frac{\| X_i - X_j \|}{\| (X_i + X_j)/2 - X_{best} \| + \varepsilon} \tag{19}$$

Where $\mathbf{X}_i$ and $\mathbf{X}_j$ respectively; $\mathbf{X}_{best}$ are the positions of the i th and j th CPs, is the position of the best current CP, and ε is a small positive number. The initial positions of CPs are determined randomly in the search space and the initial velocities of charged particles are assumed to be zero. Also **P**ij determines the probability of moving each CP toward the others as:

$$p_{ij}=\begin{cases}1 & \dfrac{fit(i)-fit_{best}}{fit(j)-fit(i)}>rand \quad \vee \quad fit(j)<fit(i)\\ 0 & else\end{cases} \tag{20}$$

The resultant forces and the motion laws determine the new location of the CPs. At this stage, each CP moves towards its new position under the action of the resultant forces and its previous velocity as:

$$X_{j,new}=rand_{j1}\,.\,k_a\,.\,\frac{F_j}{m_j}\,.\,\Delta t^2+rand_{j2}\,.\,k_v\,.\,V_{j,old}\,.\Delta t+X_{j,old} \tag{21}$$

$$V_{j,new}=\frac{X_{j,new}-X_{j,old}}{\Delta t} \tag{22}$$

Where k_a is the acceleration coefficient; k_v is the velocity coefficient to control the influence of the previous velocity; and $rand_{j1}$ and $rand_{j2}$ are two random numbers uniformly distributed in the range of (0.1). To save the best design a memory (Charged Memory or CM) is considered. If each CP exits from the allowable search space, its position is corrected using the harmony search-based handling. According to this mechanism, any component of the solution vector violating the variable boundaries can be regenerated from the CM as:

$$\begin{cases}\text{w.p. CMCR} & \begin{cases}\Rightarrow \text{select a value for a variable form CM}\\ \Rightarrow \text{w.p. (1-PAR) do nothing}\\ \Rightarrow \text{w.p. PAR choose a neighboring value}\end{cases}\\ \text{w.p. (1-CMCR)} & \Rightarrow \text{select a new variable randomly}\end{cases} \tag{23}$$

Where $x_{i,j}$ is the i th component of the CP_j . The Charged Memory Considering Rate (CMCR) varying between 0 and 1, sets the rate of choosing a value in the new vector from the historic values stored in the CM, and (1-CMCR) sets the rate of randomly choosing one value from the possible range of values. The pitch adjusting process is performed only after a value is chosen from CM. The value (1-PAR), sets the rate of doing nothing. Here, ‘‘w.p.’’ means ‘‘with probability’’. For more details, the reader may refer to Kaveh and Talatahari [23].

In order to have discrete results, a rounding function is utilized which changes the magnitude of a result to the nearest discrete value, as follows:

$$X_{i,new}=\text{Round}\left(rand_{j1}.k_a.\frac{F_j}{m_j}.\Delta t^2+rand_{j2}.k_v.V_{i,old}.\Delta t+X_{i,old}\right) \tag{24}$$

5. Optimum Design Algorithm

The optimum design algorithm developed for single layer lamella domes based on charged system search method treats the total number of rings, the height of the crown and the pipe cross sectional designations for each group in the dome as a design variable.

Charged system search algorithm initiates the design process by first randomly selecting values for the total number of rings and the crown height from the design pool. This is followed by the selection of sequence numbers for the pipe sections from the available steel pipe section list that are to be adapted for member groups of the dome. Once the total number of rings and height of crown are decided, the geometry of the lamella dome becomes available. Furthermore, with the selection of the sequence numbers for the pipe section, the sectional designation and properties of that section becomes available for the algorithm.

The design algorithm consists of the following steps:

1. Select the values of initial parameters. The charged memory size CMS, the charged memory considering rate CMCR and the pitch adjustment rate PAR are selected.

2. Generate a charged memory matrix. Select randomly total number rings, crown height and sequence number of a steel section from the discrete list for each group in the dome.

3. Generate the geometrical data such as member incidences joint coordinates automatically using the values selected for the total number of rings and crown height.

4. Carry out the nonlinear elastic critical load analysis of the steel dome with the pipe sections selected for member groups until the ultimate load factor is reached and check whether there is a loss of stability at any stage of this nonlinear analysis. If the loss of stability occurs then this selected design vector is taken out from harmony memory matrix and replaced by a new design vector that is selected randomly again. This replacement process is repeated until a design vector is determined that does not have instability problem. This vector is then checked whether it satisfies the design constraints. If it does not it is once more discarded. However, if it is slightly infeasible it is considered for the harmony memory matrix.

5. Check whether the new design vector selected should be pitch-adjusted as explained in step 3 of the charged system search method.

6. Calculate the objective function value for the newly selected design vector. If this value is better than the worst charged vector in the charged memory matrix, it is then included in the matrix while the worst one is taken out of the matrix. The charged memory matrix is then sorted in descending order by the objective function value.

7. Repeat steps 2 and 6 are until the pre-selected maximum number of iterations is reached. The maximum number of iterations is selected large enough such that within this number of design cycles no further improvement is observed in the objective function.

7. Design example

The behaviour of the dome structures is nonlinear due to the change of geometry under external loads. The imperfections arising either from the manufacturing process and/or from the construction of the structure can also be the source of nonlinearity.

Inclusion of geometric nonlinearity requires additional considerations in the analysis. Stability check is also necessary during the analysis to ensure that the structure does not lose its load carrying capacity due to instability [15] and furthermore, considering the nonlinear behaviour in the design of domes results in lighter structural systems. The elastic instability analysis of domes involves repeated analysis of the structure at progressively increasing load factor. At each increment of the load factor, nonlinear analysis of the structure is carried out. For this, the stiffness matrix for a three dimensional space member that includes the effect of flexure on axial stiffness and the stiffness against translation is derived. Details of this derivation and related terms of the nonlinear stiffness matrix of a space member are given in Majid [26]. The stiffness matrix of a stable structure is positive definite. During the nonlinear analysis iteration, the determinant of the overall stiffness matrix is checked to determine whether at any load increment it becomes negative.

Table 1. The allowable steel pipe sections taken from LRFD-AISC

Z (in^4)	radius Gyration (in)	S (in^3)	J (in^4)	I (in^4)	Area (in^2)	Weigth of per ft (lbs)	Thickness (in)	Inside Diameter (in)	Outside Diameter (in)	Nominal Diameter (in)	Type
0.059	0.261	0.041	0.082	0.017	0.25	0.85	0.109	0.622	0.84	1/2	**ST**
0.072	0.334	0.071	0.142	0.037	0.333	1.13	0.113	0.824	1.05	3/4	**ST**
0.1	0.421	0.133	0.266	0.087	0.494	1.68	0.133	1.049	1.315	1	**ST**
0.125	0.54	0.235	0.47	0.195	0.669	2.27	0.14	1.38	1.66	1 1/4	**ST**
0.187	0.623	0.326	0.652	0.31	0.799	2.72	0.145	1.61	1.9	1 1/2	**ST**
0.233	0.787	0.561	0.824	0.666	1.07	3.65	0.154	2.067	2.375	2	**ST**
0.324	0.947	1.06	2.12	1.53	1.7	5.79	0.203	2.469	2.875	2 1/2	**ST**
0.448	1.16	1.72	3.44	3.02	2.23	7.58	0.216	3.068	3.5	3	**ST**
0.414	1.34	2.39	4.78	4.79	2.68	9.11	0.226	3.548	4	3 1/2	**ST**
0.761	1.51	3.21	6.42	7.23	3.17	10.79	0.237	4.026	4.5	4	**ST**
0.581	1.88	5.45	10.9	15.2	4.3	14.62	0.258	5.047	5.563	5	**ST**
1.02	2.25	8.5	17	28.1	5.58	18.97	0.28	6.065	6.625	6	**ST**
1.45	2.94	16.8	33.6	72.5	8.4	28.55	0.322	7.981	8.625	8	**ST**
2.33	3.67	29.9	59.8	161	11.9	40.48	0.365	10.02	10.75	10	**ST**
1.87	4.38	43.8	87.6	279	14.6	49.56	0.375	12	12.75	12	**ST**
1.67	0.25	0.048	0.096	0.02	0.32	1.09	0.147	0.546	0.84	1/2	**EST**
3.22	0.321	0.085	0.17	0.045	0.433	1.47	0.154	0.742	1.05	3/4	**EST**
3.08	0.407	0.161	0.322	0.106	0.639	2.17	0.179	0.957	1.315	1	**EST**
4.31	0.524	0.291	0.582	0.242	0.881	3	0.191	1.278	1.66	1 1/4	**EST**
4.32	0.605	0.412	1.122	0.391	1.07	3.63	0.2	1.5	1.9	1 1/2	**EST**
3.04	0.766	0.731	1.462	0.868	1.48	5.02	0.218	1.939	2.375	2	**EST**
7.27	0.924	1.34	2.68	1.92	2.25	7.66	0.276	2.323	2.875	2 1/2	**EST**
5.85	1.14	2.23	4.46	3.89	3.02	10.25	0.3	2.9	3.5	3	**EST**
5.12	1.31	3.14	6.28	6.28	3.68	12.5	0.318	3.364	4	3 1/2	**EST**
11.2	1.48	4.27	8.54	9.61	4.41	14.98	0.337	3.826	4.5	4	**EST**
10.1	1.84	7.43	14.86	20.7	6.11	20.78	0.375	4.813	5.563	5	**EST**
9.97	2.19	12.2	24.4	40.5	8.4	28.57	0.432	5.761	6.625	6	**EST**
22.2	2.88	24.5	49	106	12.8	43.39	0.5	7.625	8.625	8	**EST**
16.6	3.63	39.4	78.8	212	16.1	54.74	0.5	9.75	10.75	10	**EST**
17.5	4.33	56.7	113.4	362	19.2	65.42	0.5	11.75	12.75	12	**EST**
39.4	0.703	1.1	2.2	1.31	2.66	9.03	0.436	1.503	2.375	2	**DEST**
33	0.844	2	4	2.87	4.03	13.69	0.552	1.771	2.875	2 1/2	**DEST**
57.4	1.05	3.42	6.84	5.99	5.47	18.58	0.6	2.3	3.5	3	**DEST**
28.9	1.37	6.79	13.58	15.3	8.1	27.54	0.674	3.152	4.5	4	**DEST**
52.6	1.72	12.1	24.2	33.6	11.3	38.55	0.75	4.063	5.563	5	**DEST**
75.1	2.06	20	40	66.3	15.6	53.16	0.864	4.897	6.625	6	**DEST**
52.8	2.76	37.6	75.2	162	21.3	72.42	0.875	6.875	8.625	8	**DEST**
ST= standard weight, EST= extra strong, DEST= double-extra strong.											

During the nonlinear analysis iteration, the determinant of the overall stiffness matrix is checked to determine whether at any load increment it becomes negative. This is an indication of a loss of stability of the structure and the load factor which causes this is identified as the critical load factor. The detailed steps of the elastic instability analysis of space frames are given in Makowski [1] and Majid [26]. In order to show the effect of nonlinearity in the behaviour of lamella domes, linear and non-linear Z-displacement of crown of the lamella dome is plotted under different concentrated loads in Figure 2. So, it is clear that if the realistic behaviour of a lamella dome is to be used in its optimum design, the geometric nonlinearity of the structure is required to be considered.

Here, just the lamella domes are studied. Lamella dome have diagonals extending from the crown down towards the equator of the dome, in both clockwise and anticlockwise directions, and have horizontal rings, but have no meridian ribs.

Similar to the Schwedler domes, the number of nodes in each ring is equal to 12, while contrary to the two previous types, only the first joints of the odd rings are located on the intersection points of that ring and the x-axis, and the first nodes of the evenly numbered rings are obtained by an anticlockwise rotation of the nodes along y-axis by 30°. Figure.3 shows a typical lamella dome with 3 rings. Figure.4 shows a typical lamella dome with 4 rings.

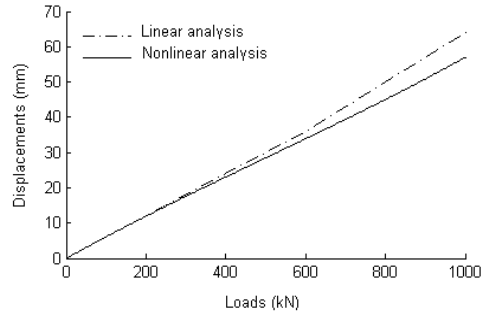

Figu 2. Z-displacements of crown of the lamella dome with Linear and nonlinear analysis.

The grouping of members is performed in a way that members between each ring are to be made one group and the members on each ring are another group. The diagonal members between the crown and the first ring are group 1, the members on the first ring are group 2, the members between ring 1 and 2 are group 3 and the members on the second ring are group 4, and the diagonal members between the third and the second ring are group 5.

Therefore, the total number of groups for the lamella domes, this number is $2n_r - 1$, since no meridian ribs are present. In the case studies, the optimum number of rings obtained by the algorithms is equal to three.

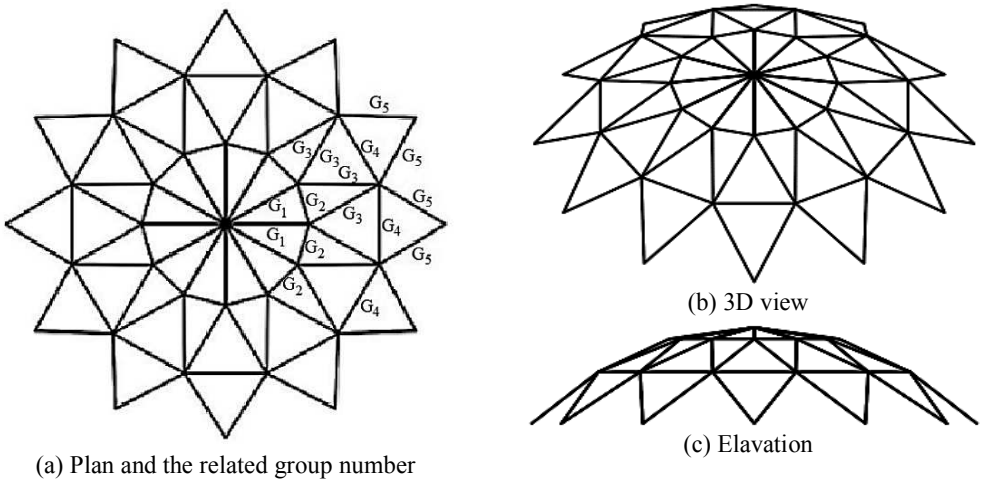

Fig 3. A lamella dome with three rings

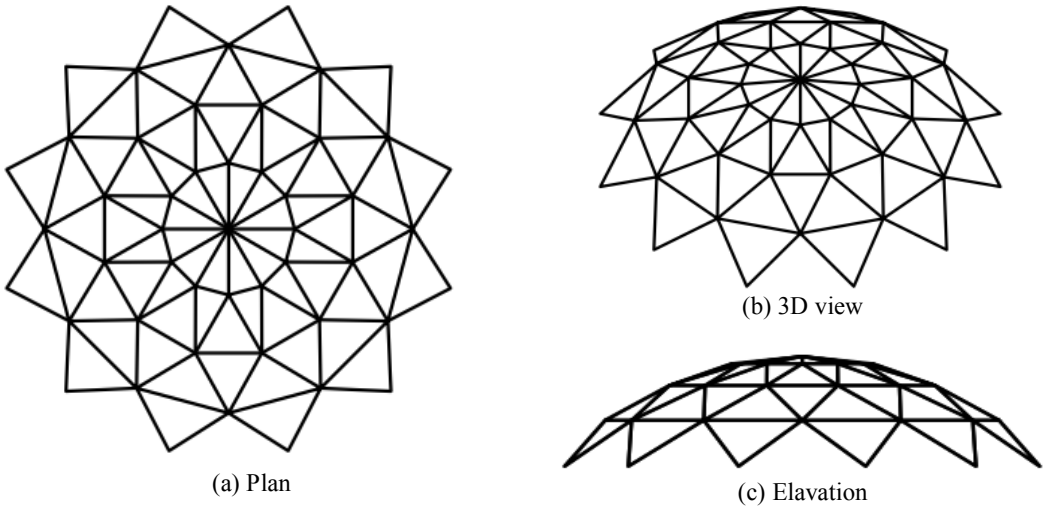

Fig 4. A lamella dome with four rings

The design example presented is used to determine the optimum number of rings, the crown height and the circular steel hallow section designations for the single layer lamella dome shown in Figure 2 and solved by the standard CSS. The design pool for the total number of rings for the dome contains 4 values that are 3, 4, 5 and 6. For the height of the crown a list is prepared starting from 1m to 8.0 m with the increment of 0.25m. There are 25 values altogether for the harmony search algorithm to choose from. Among the steel pipe given in LRFD-AISC [24], 37 steel pipe sections are selected to be used as the standard table for the charged system search algorithm to select from. The sectional designations selected vary from PIPST13 to PIPDEST203 where abbreviations ST, EST, and DEST stands for standard weight, extra strong, and double-extra strong respectively. The modulus of elasticity for the steel is taken as 205 kN/mm2. The diameter of the dome is taken as 20m.

The dome is considered to be subjected to equipment loading of 500 kN at its crown. Also for this example initial variants of the CSS algorithm are as:

A population of 25 individuals is used for the CPs and the value of constant **a** is set to one. The acceleration coefficient k_a and the velocity coefficient k_v are taken as 0.5. Here, CMCR = 0.95 and PAR = 0.10 are used as suggested by Kaveh and Talatahari [28]. And after that the algorithms CSS and analysis methods are coded in Matlab v2013a . The limitations imposed on the joint displacements are given in Table 2.

The optimum sectional designations for each group and the height of the dome obtained for the dome with 3 rings are given in Table 3. It is noticed that the strength limitations are dominant in the design problem. In the optimum dome while the strength ratios were equal to 1, the restricted displacement is much less than their upper bound.

Table 2. Displacement restrictions of the single layer lamella dome

Joint number	Displacement restrictions (mm)		
	X-direction	Y-direction	Z-direction
all joint	**28**	**28**	**28**

Table 3. Optimum design for the single layer lamella dome

Group Number	Optimum Section Designations
1	PIPEST (10)
2	PIPST (3 1/2)
3	PIPST (1)
4	PIPST (3)
5	PIPST (3/4)
Optimum Number of Rings	3
Optimum Height (m)	5
Max.Displacement (mm)	27.70
Max. Displacement Ratio (%)	98.96
Max.Strength Ratio (%)	97.57
Weight (kg)	5,102
$\sum L_i$ (cm)	412.992

8. Concluding remarks

In this paper, the Charged System Search (CSS) method is used to develop an optimum design algorithm for single layer lamella domes. The Charged System Search (CSS) algorithm is a new stochastic random search approach that simulates the Coulomb and Gauss laws from electrical physics and the governing laws of motion from the Newtonian mechanics.

It is shown that this technique is mathematically quite simple but effective in finding the solutions of combinatorial optimization problems. The optimum design algorithm presented determines the total number of rings, the optimum height and the optimum steel section designations for the members of single layer lamella dome from the available steel pipe sections table and implements the design constraints from LRFD-AISC.

The results showed that the Charged System Search (CSS) algorithm is an efficient technique that can successfully be used in optimum topology design of single layer lamella domes. Furthermore, the global stability of the dome is required to be checked during the design process.

REFERENCES

1. Makowski ZS (1984) Analysis, design and construction of braced domes. Granada, London
2. Rajeev, S., and Krishnamoorthy, C. S. (1992). Discrete optimization of structures using genetic algorithms. *J. Struct. Engrg.*, ASCE, 118(5), 1233–1250.
3. Camp, C. V., Pezeshk, S., and Cao, G. (1996). ‘‘Design of 3-D structures using a genetic algorithm.’’ *Proc, 1st U.S.-Japan Sem. on Struct. Optimization*, April, Chicago.

4. Camp, C. and Bichon, B. (2004). "Design of Space Trusses Using Ant Colony Optimization." *J. Struct. Eng.*, 10.1061/(ASCE)0733-9445(2004)130:5(741), 741-751.
5. M. Serra and Venini P. 2006. On some applications of ant colony optimization metaheuristic to plane truss optimization. Struct Multidisc Optim (2006) 32: 499–506. DOI 10.1007/s00158-006-0042-x
6. Perez, R.E. and Behdinan, K., 2007a. Particle Swarm approach for Structural Design Optimization. *Computers and Structures*, 85 (19-20), 1579–1588.
7. Perez, R.E. and Behdinan, K., 2007b. Particle Swarm Optimization in Structural Design. *In*: F.T. Chan and M.K. Tiwari, eds. *Swarm Intelligence: Focus on Ant and Particle Swarm Optimization*. ISBN 978-3-902613-09-7 Vienna, Austria: Itech Education and Publishing, 373–394.
8. L Lamberti. 2008. An efficient simulated annealing algorithm for design optimization of truss structures. Computers & Structures 86 (19), 1936-1953.
9. Kaveh, A., and Shojaee, S. (2007). " Optimal design of skeletal structures using ant colony optimisation." Int. J. Numer. Methods Eng., 70(5), 563–581.
10. Kaveh, A., Farahmand Azar, B., Talatahari, S. (2008). "Ant colony optimization for design of space trusses." Int. J. Space Struct., 23(3), 167–181.
11. Kaveh A, Talatahari S (2009a) Particle swarm optimizer, ant colony strategy and harmony search scheme hybridized for optimization of truss structures. Comput Struct 87(5–6):267–283.
12. Kaveh A, Talatahari S (2009b) Size optimization of space trusses using Big Bang–Big Crunch algorithm. Comput Struct 87:1129–1140
13. Kaveh A, Talatahari S (2009c) A particle swarm ant colony optimization algorithm for truss structures with discrete variables. J Constr Steel Res 65(8-9):1558-1568
14. Kaveh A, Talatahari S (2010a) Optimal design of skeletal structures via the charged system search algorithm. Struct Multidiscipl Optim 41(6):893–911
15. W. Prager and G.I.N. Rozvany. Optimization of Structural Geometry. In A.R. Bednarek and L. Cesari, editors, International Symposium on Dynamical Systems, pages 265–293, New York, 1977. University of Florida, Academic Press Inc.
16. Hasancebi, O. & Erbatur, F. (2002). Layout optimisation of trusses using simulated annealing. *Advances in Engineering Software*, Vol. 33, 681–696
17. Saka MP (2007) Optimum geometry design of geodesic domes using harmony search algorithm. Adv Struct Eng 10:595-606
18. Kaveh A, Talatahari S (2010b) Optimum design of skeletal structures using imperialist competitive algorithm. Comput Struct 88:1220–1229
19. Mota Soares C. M., Mota Soares C. A., Correia V. F. & Mateus H. C., "Optimal Design of Thin Laminated, Composite Structures", Editors M. Bendsoe and C. A. Mota Soares, Topology Design of Structures, Kluwer Academic Publishers, pp. 313-317, 1993.
20. Rozvany, G.I.N., Bendsøe, M.P., Kirsch, U., 1995. Layout optimization of structures. Appl. Mech. Rev. 48 _2.
21. Topping, K. (1983). Educational systems for disruptive adolescents. New York: St. Martin's Press, 192 pp
22. Lee, K.S. and Geem, Z.W., 2004. A new structural optimization method based on the harmony search algorithm. *Computers and Structures*, 82 (9–10), 781–798.
23. Kaveh A, Talatahari S (2010c) A novel heuristic optimization method: charged system search. Acta Mech 213(3-4):267-289
24. LRFD-AISC (1999). Manual of Steel Construction, Load and resistance factor design. Metric conversion of the second edition, Chicago: AISC. vols. 1 & 2.
25. Kaveh A, Talatahari S (2010b) Optimal design of Schwedler and ribbed domes via hybrid Big Bang-Big Crunch algorithm. J Constr Steel Res 66(3):412-419
26. Majid KI (1972) Nonlinear structures. Butterworth, London
27. MP Saka (2008). Optimum design of steel sway frames to BS5950 using harmony search algorithm, Journal of Constructional Steel Research.
28. Kaveh A, Talatahari S (2009d) Optimal design of single layer domes using Meta-Heuristic algorithms; A Comparative Study , International Journal of Space Structures Vol. 25 No. 4 2010