J. Appl. Environ. Biol. Sci., 6(6)1-7, 2016

ISSN: 2090-4274
Journal of Applied Environmental and Biological Sciences
www.textroad.com

Evaluation of the Characteristics of Masonry Bricks Containing Waste Fly Ash

[a*]Harjinder Singh, [b]G.S.Brar, [a]G. S. Mudahar

[a]Department of Physics, Punjabi University, Patiala
[b]Department of Higher Education, Additional Project Director, SCO 66-67, Sector 17 D, Chandigarh
Received: February 23, 2016
Accepted: April 24, 2016

ABSTRACT

The masonry brick mixtures containing flyash at different proportions were formed, dried and then fired at 800 and 1000°C to evaluate its mechanical and radiation shielding characteristics. The radiation shielding parameters of lightweight clay-flyash bricks have been investigated by using ^{241}Am (59.4keV), ^{137}Cs (661.6keV), and ^{60}Co (1173.2keV and 1332.5 keV) radioactive sources. It was observed that the different percentages of flyash in clay lead to significant variations in these parameters. Energy dispersive X-ray fluorescence spectrometer(EDS) was used to identify and measure the elemental compositions of the clay-flyash bricks. The radiation protection efficiency of the tested clay-flyash bricks demonstrated that the multilayer exterior walls built from these bricks could effectively attenuate moderate-energy gamma rays. Bricks using residual flyash could be preferentially used for buildings to address the issues of radiation shielding, cost effective radioactive waste management, and disposal of flyash in a useful manner. Therefore, this study can contribute to recycling the waste flyash as a replacement material in masonry brick.
KEYWORDS: Attenuation coefficients; Mean free path; Radiation protection efficiency.

1. INTRODUCTION

As the applications of nuclear technology increase, the use of radioactive sources is increasing in different fields such as nuclear research, nuclear power, space research, medicine, and agriculture. Using radiation in these fields can induce hazardous radiation effects in human cells. For radiation protection inside houses, the building material must provide adequate protection, and keep the probability of harmful effects at an acceptable level for personnel at a reasonable cost. The mass attenuation coefficient provides a wide variety of information about photon penetration and the energy deposition in biological shielding and the other composite materials.

Due to industrialization, the generation of radioactive waste has increased, and needs to be controlled safely. The need for good radiation shielding materials to be sustainable is becoming a very important issue. Many researchers have been working on how to reuse waste materials in a useful manner. New building materials should be cost effective, eco-friendly, and preferably utilize industrial waste. In recent years, several studies have been performed on the measurement of linear and mass attenuation coefficients for different materials such as building materials [1-7], concretes [8-9], cements [10-11], and glasses [12-13]. Clay is a naturally occurring material, composed of fine grain minerals, which displays plasticity when moist, and becomes hard when dried or fired, and has been used for manufacturing of bricks since ancient times. Clay soils demonstrate better photon energy absorption characteristics than other soils[14-15].

The depletion of energy resources and raw materials has a huge impact and the reuse of various residues has become a necessity. Flyash is one of the numerous substances that can cause air, water, and soil pollution. The disposal of this waste material is a matter of great concern as it has become a major environmental problem in India. It is an airborne material of extremely fine particles having spherical shape. The utilization of flyash in construction materials shows some examples of the success of research in this area. Flyash is currently being used in the manufacturing of bricks, blocks, cement, landfills, and of lightweight construction aggregates. Flyash can also be used as a radiation shielding material for gamma rays if it is highly compacted [16-17].Therefore, research on the use of this waste product will help to solve many environmental problems.

One of the possible ways to take advantage of the fine particle size of clay and the pozzolanic properties of flyash is to prepare compacted bricks incorporating flyash in clay with an optimal water content. Flyash alone has insufficient plasticity to produce bricks strong enough to survive handling and drying, necessitating the addition of binder clay. The finer particles of flyash will fill the pores to reduce the void ratio and increase strength. The

***Corresponding author:** Harjinder Singh, Department of Physics, Punjabi University, Patiala. Tel.: +91 9815729166
E-mail address: maurharjinder@gmail.com

incorporation of flyash in the clay material has a beneficial action on mechanical properties of the clay [18]. Fired bricks with a high volume ratio of flyash have high compressive strength and low water absorption [19].

In this study, flyash was collected and then compacted with locally available clay in form of bricks, in order to design, and explore its use as a cost effective gamma ray shield. These bricks exhibit good mechanical properties such as high strength, and durability. In the present work, an attempt was made to measure the gamma ray interaction parameters such as the mass and linear attenuation coefficients, mean free paths, and the radiation protection efficiency of clay-flyash bricks to assess residential safety, in the event of environmental release of radioactive substances in a nuclear emergency.

2. Theoretical calculations

A collimated beam of mono-energetic gamma rays is attenuated in matter according to the Lambert-Beer law

$$I = I_0 e^{-(\mu/\rho)\rho t} \tag{1}$$

where I_0 and I are the incident and transmitted intensity of photons, respectively, ρ is the density, t is the thickness of sample, and $\frac{\mu}{\rho}$ is the mass attenuation coefficient denoted by μ_m. The mass attenuation coefficient, for a compound or mixture is given by

$$\mu_m = \sum w_i \left(\mu_m\right)_i \tag{2}$$

where w_i and $\left(\mu_m\right)_i$ are the weight fraction and mass attenuation coefficient of the *i*-th constituent element, respectively.

The total linear attenuation coefficient of the mixture can then be easily found by multiplying the mass attenuation coefficient μ_m with its density:

$$\mu = \mu_m \times \rho \tag{3}$$

The radiation protection efficiency of building materials is defined by:

$$RP = \left(1 - \frac{I}{I_0}\right) \times 100 \tag{4}$$

3.MATERIALS AND METHODS

3.1. Materials

In this study, flyash was procured from Thermal Power Station Ropar (Punjab), India. Clay soil samples were collected from a site, where the ground was already excavated to a depth of approximately 3m. The major, minor and trace element levels present in the brick samples was accomplished by Energy Dispersive X-ray spectrometer (EDS) by using OXFORD INCAx-act model at the Thapar University, Patiala. X-ray fluorescence is a non-destructive and accurate analytical method widely used for elemental analysis of an unknown sample. The weight concentrations of elements for clay-flyash bricks are summarized in Table 1.

3.2. Preparation of shielding material

The clay-flyash bricks were prepared with flyash contents of 10%, 20%, 30%, 40%, and 50%, and designated as CF10, CF20, CF30, CF40, and CF50, respectively. The samples were weighed accurately using an electronic balance with a resolution of 0.01g, and mixed thoroughly with the addition of appropriate amounts of distilled water. The prepared mixture was then poured into a clean cubic casting mould, filling one third at a time. During packing, the mixture was compacted by applying equal blows in a uniform manner over the surface to remove air for densification of the bricks. A trowel was used to even out the surface. By compaction the distance between the particles decreases and the number of contact point increases. As a consequence, the total porosity decreases and the compressive strength of compacted samples enhances. The dry samples were then fired in a muffle furnace at 1000°C for 24 h. The manufactured bricks were tested for density, compressive strength and radiation protection efficiency.

3.3.Experimental procedures

The mass attenuation measurements of the prepared samples were determined by performing a transmission experiment with narrow beam geometry. The schematic arrangement of the experimental setup used in the present study is shown in Fig. 1. The samples were separately irradiated by photons emitted from^{241}Am (59.4keV),^{137}Cs

(661.6keV), and^{60}Co (1173.2keV and 1332.5 keV), procured from the Board of Radiation and Isotope Technology, Navi Mumbai, India. The source was surrounded by lead collimators with a single aperture of 6 mm, placed behind the source collimator. Two collimators with apertures of 4 mm and 2.8 mm were placed with their front faces at a distance of 200 mm and 550 mm from the source, respectively.

The pulse-height spectra of the gamma rays transmitted through the brick samples were measured using a $3'' \times 3''$ Na(Tl) detector (CANBERRA, PMT base model; 802), connected to a multichannel pulse height analyzer. The detector has a resolution of about 7.5% at 662 keV of Cs-137, which is capable of distinguishing the gamma ray energies. The detector assembly was surrounded by a cylindrical lead shield of ~8 cm thickness. The sample was placed between the standard gamma point source and the detector. The stability of the experimental setup was tested using Al as a reference absorber at 661.6 keV. To limit the statistical error (<0.5%) while taking readings, each spectrum was recorded for the time period of 1800 s to get sufficient number of counts. Measurements of attenuated gamma ray counts at each photon energy were repeated a minimum of three times, to improve the statistical error. The laboratory temperature was maintained at approximately $(20 \pm 1)\,^{o}C$. The criterion $\mu t < 1$, where t is the sample thickness, was used to decrease the number of multiply scattered photons reaching the detector [20-21].

4. RESULTS AND DISCUSSIONS

In India, clay-flyash bricks are the most basic building materials for construction of houses. Table1 shows the elemental compositions of the clay-flyash brick samples. The brick samples with flyash content have relatively low densities, it is due to the lower specific gravity of the flyash relative to the clay [22].Theoretical values of the mass attenuation coefficients μ_m for all brick samples have been obtained using personal computer software package WinXcom computer program [23-24]. The experimental and the theoretical values of the mass attenuation coefficients for clay-flyash brick samples are listed in Table 2 and graphically shown in fig. 2.

Figure 2 shows that the total mass attenuation coefficients μ_m decrease with increasing photon energies. It is also seen that variation in μ_m values with chemical composition is large at an energy of 59.5 keV and show a decreasing trend, with strong energy dependence in the low incident photon energy range of 1–100 keV [12]. The differences observed in the mass attenuation coefficient values for the samples in the low energy region can be attributed to the dominance of photoelectric absorption, because the photoelectric cross section is strongly dependent (Z^{4-5}) on the atomic number of the constituent elements. In the intermediate (100 keV-1 MeV) and high (1-15 MeV) energy regions, the μ_m values show a less energy dependent behaviour and gradually decrease with the increasing incident energy. The values of mass attenuation coefficient are invariable in the energy range (661.6 - 1332.5keV) due to the dominance of Compton scattering, which is linearly Z dependent. The constancy of μ_m for the chosen samples is in line with the theoretical findings of [25], in which they have reported that in the energy region 300 keV to 3 MeV, the variations in the total μ_m for low Z materials is negligible. The mass attenuation coefficients of clay containing different amounts of flyash have been measured, and the results are compared with concrete selected from the published literature [26].

The value of linear attenuation coefficient decreases with flyash content in the brick sample as shown in Fig.3. This behaviour may be associated with the incorporation of flyash which makes the final product to have a more porous internal structure causes the density of bricks to decrease as the flyash content is increased as shown in table 2.As the linear attenuation coefficients depend on the material density so larger thicknesses of the clay-flyash brick are required for radiation safety in houses.

The variation in compressive strength with the flyash content and firing temperature of bricks are presented in fig. 4. The compressive strength of bricks produced decreased by depending on flyash content in brick body for both temperatures. Although bricks loss strength, still all bricks with high ash content have highest compressive strength strength at 1000°C above the minimum compressive strength requirement 3.5 MPa according to the Indian standards.

Radiation protection efficiency of clay-flyash bricks are compared with common shielding material concrete in Table 3. A clay-flyash brick having 50% flyash content is capable of stopping 98%, 68%, 57%, and 55% of incident gamma rays of energies 59.4, 661.6, 1173.2, and 1332.5 keV, respectively. During recent nuclear accidents a large quantity of ^{137}Cs radiation released into the atmosphere. Even at 661.6 keV energy radiation protection efficiency of CF50 brick is 68% comparable to concrete. The radiation protection efficiency shows that these bricks are superior at low-energy doses.

Table 1 Elemental compositions by weight of the clay-flyash brick samples and concrete [26].

Element	Samples					
	CF10	CF20	CF30	CF40	CF50	Concrete
H	…	…	…	…	…	0.009
C	…	…	…	…	…	0.001
O	0.498	0.493	0.49	0.486	0.482	0.536
Na	…	…	…	…	…	0.005
Mg	…	…	…	…	…	0.001
Al	0.092	0.097	0.102	0.107	0.112	0.013
Si	0.267	0.267	0.267	0.267	0.267	0.367
S	…	…	…	…	…	0.001
K	0.023	0.022	0.021	0.02	0.019	0.003
Ca	0.001	0.002	0.003	0.004	0.005	0.056
Fe	0.113	0.107	0.101	0.095	0.088	0.006
Cu	0.002	0.005	0.007	0.01	0.012	…
Zn	0.003	0.005	0.008	0.011	0.013	…

Table 2 Mass attenuation coefficients of clay-flyash bricks and concrete [26].

Samples	Density (g/cm^3)	59.5 keV		661.6 keV		1332.5 keV	
		Experimental	Theoretical	Experimental	Theoretical	Experimental	Theoretical
Concrete [25]	2.25	0.231±0.0040	0.249	0.061± 0.0033	…	0.051±0.0014	0.055
CF10	1.73	0.298±0.0025	0.37	0.0757±0.0015	0.0766	0.0551±0.0023	0.0546
CF20	1.61	0.295±0.0026	0.372	0.0789±0.0016	0.0766	0.0559±0.0019	0.0546
CF30	1.6	0.292±0.0029	0.373	0.0779±0.0019	0.0765	0.0553±0.0021	0.0546
CF40	1.56	0.0288±0.0028	0.374	0.0774±0.0018	0.0765	0.0536±0.0019	0.0546
CF50	1.54	0.287±0.0027	0.375	0.0762±0.0017	0.0765	0.0529±0.0017	0.0546

Table3 The gamma ray radiation protection efficiency %(app.) of the samples.

Sample	Energy (keV)			
	59.4	661.6	1173.2	1332.5
Concrete [26]	99	74	72	70
CF10	99	73	64	61
CF20	99	71	61	59
CF30	99	71	59	59
CF40	98	70	58	57
CF50	98	68	57	55

Fig. 1. Experimental setup of standard transmission geometry

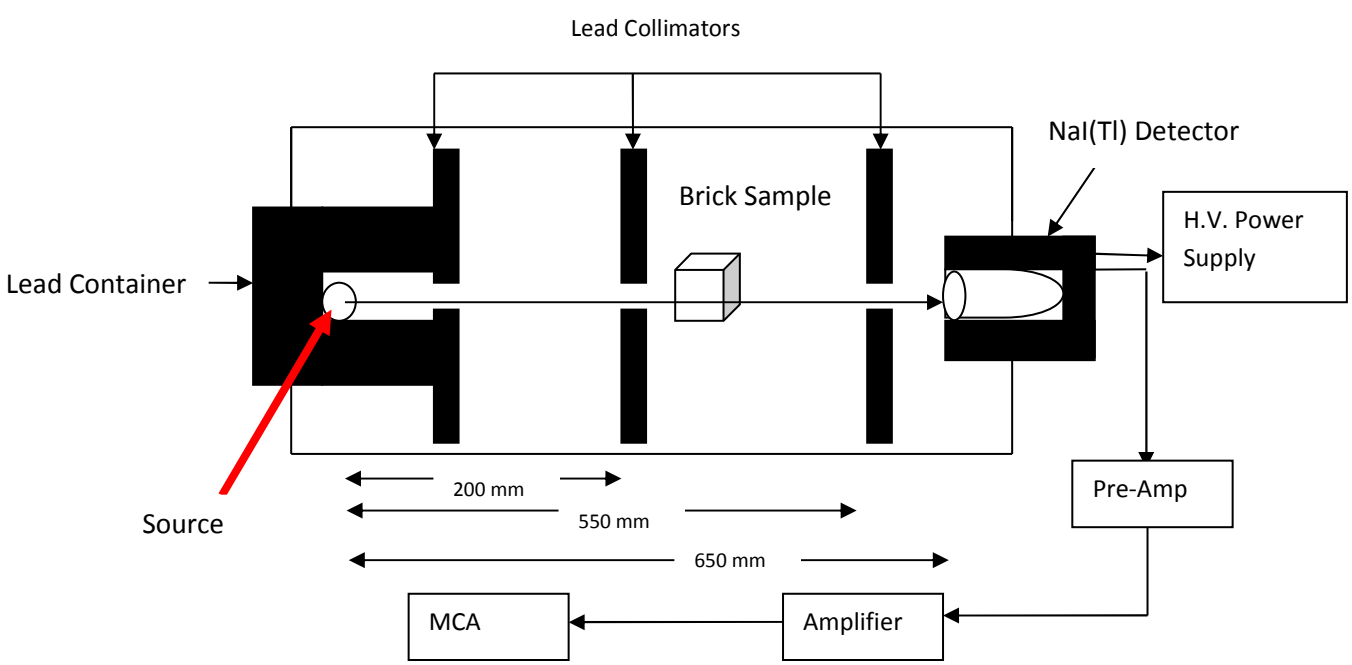

Fig. 2. Variation of mass attenuation coefficient with incident photon energy.

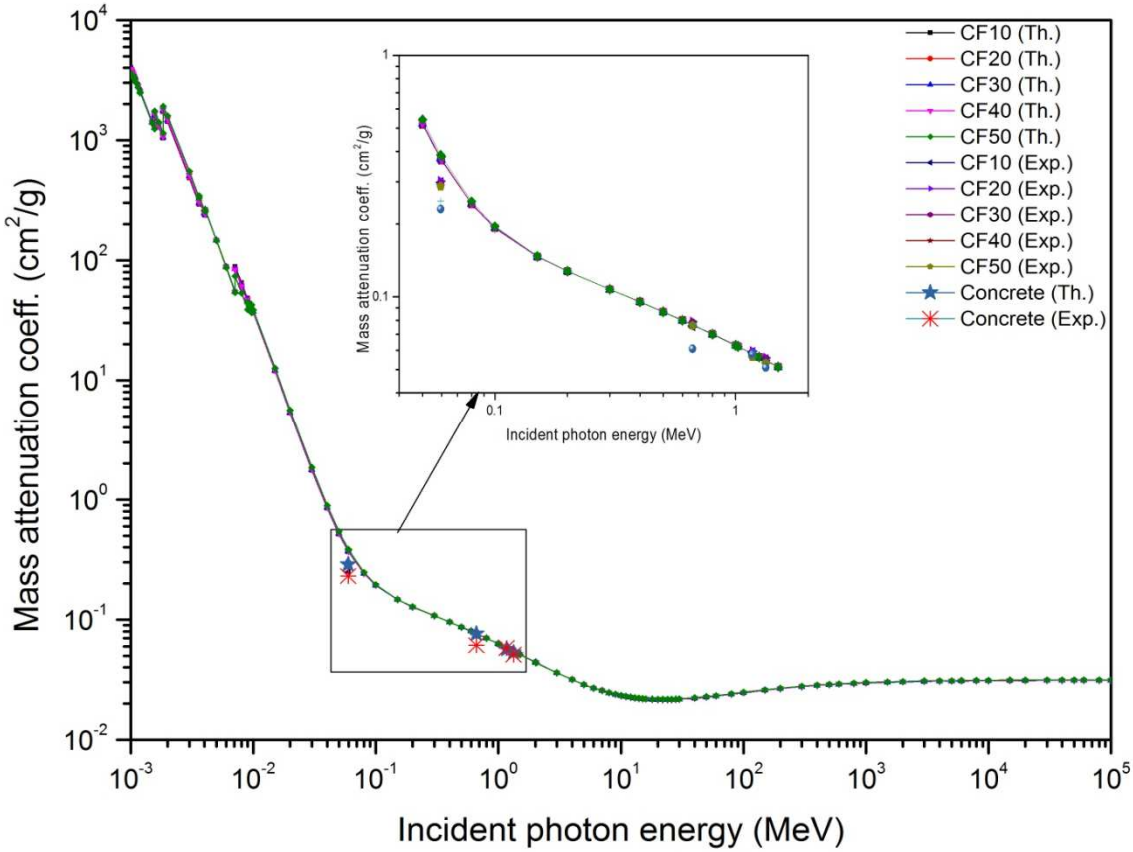

Fig. 3. Variation of linear attenuation coefficient with flyash content in bricks.

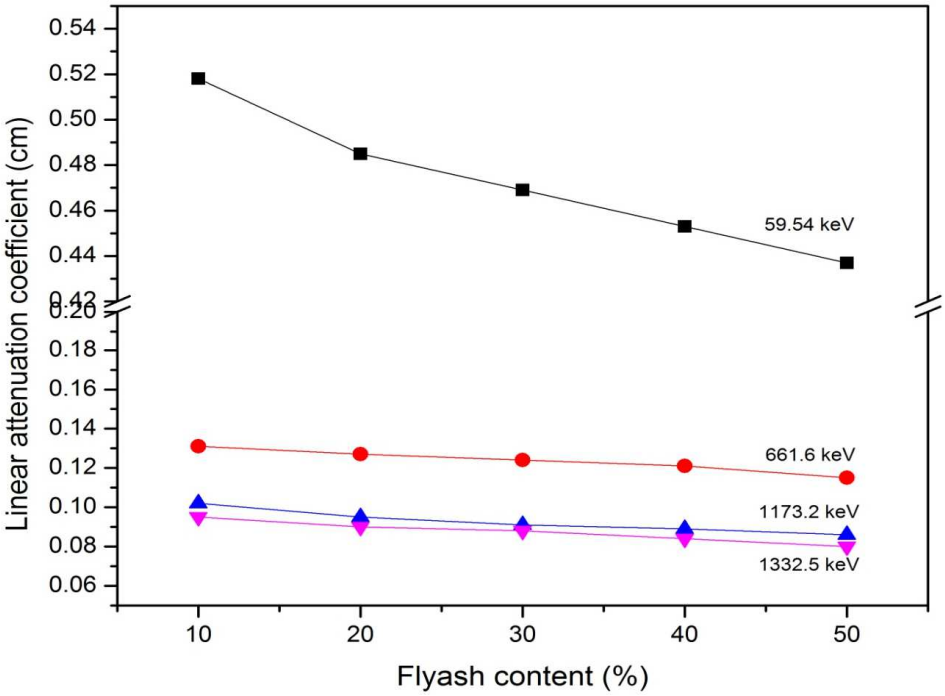

Fig. 4. Variation of compressive strength with the fly ash content and firing temperature.

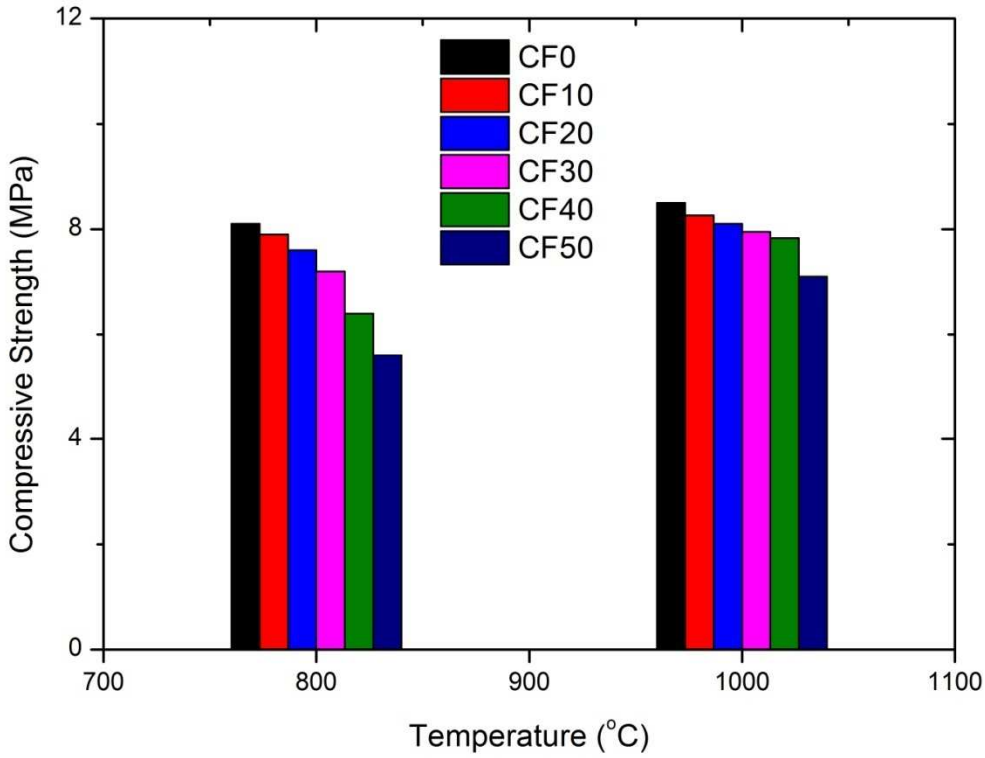

5. Conclusion

The shielding parameters of various compositions of clay-flyash bricks typically used as building materials in India were evaluated to determine an optimal mixture composition. The radiation protection efficiency of multilayered exterior walls made of clay-flyash bricks is sufficient for use as a biological shield, and such bricks may offer an approximately equal protection to residents to that of ordinary concrete. These bricks can replace pure clay bricks, where space is not a constraint. In summary, clay-flyash bricks can beneficially address the issues of radiation shielding, disposal offlyash in a useful manner, environmental pollution, production costs, and also the conservation of the natural resource clay.

6. Conflicts of interest

All authors have no conflict of interest to declare.

REFERENCES

1. Kute S, Deodhar S V. Effect of flyash and temperature on properties of burnt clay bricks. J. Insti. Eng. 2003; 84:82-85.

2. Chou M-In, Chou S-Fu, Patel V, Larid C J, Ho K K. Chemical and engineering properties of fired bricks containing 50 weight percent of class F flyash. Energy Sources. 2001;23:665-673.

3. Alam M N, Miah MM, Chowdhury MI, Kamal M, Ghose S, Rahman R. Attenuation coefficients of soils and some building materials of Bangladesh in the energy range 276–1332 keV. Appl. Radiat. Isot. 2001;54: 973-976.

4. Awadallah MI, Imran MM. Experimental investigation of γ-ray attenuation in Jordanian building materials using HPGe-spectrometer. J. Environ. Radioactivity. 2007;94:129- 136.

5. Mann KS, Kaur B, Sidhu G S, Kumar A. Investigations of some building materials forγ- rays shielding effectiveness. Rad. Phys. Chem.2013;87:16–25.
6. Singh C, Singh T, Kumar A, Mudahar G S. Energy and chemical composition dependence of mass attenuation coefficients of building materials. Ann. Nuc. Energy2004;31:1199–1205.
7. SalinasI C P, Conti C C, Lopes R T. Effective density and mass attenuation coefficient for building material in Brazil. Appl. Radiat. Isot. 2006;64:13-18.
8. Akkurt I, Basyigit C, Kilincarslan S, Mavi B. The shielding ofγ-rays by concretes produced with barite, Prog. Nucl. Energy. 2005;46: 1-11.
9. Bashter I I. Calculation of radiation attenuation coefficients for shielding concretes, Ann. Nucl. Energy. 1997;24: 1389-1401.
10. Ipbüker C, Nulk H, Gulik V, Biland A, Tkaczyk A H. Radiation shielding properties of a novel cement–basalt mixture for nuclear energy applications. Nucl. Eng. Design. 2015;284:27-37.
11. Turkmen I, Ozdemir Y, Kurudirek M, Demir F, Simsek O, Demirboga R. Calculation of radiation attenuation coefficients in Portland cements mixed with silica fume, blast furnaceslag and natural zeolite. Ann. Nucl. Energy. 2008;35:1937-1943.
12. Damla N, Baltas H, Cevik U. Calculation of radiation attenuation coefficients, effective atomic numbers and electron densities for some building materials. Radi. Prot. Dosi. 2011; 38:2204-2212.
13. Singh S, Kumar A, Singh D, Thind S K, Mudahar G S. Barium-borate-flyash glasses: as radiation shielding materials. Nucl. Instr. Methods B. 2008;266:140–146.
14. Kuck N, Tumsavas Z, Cakir M. Determining photon energy absorption parameters fordifferent soil samples. J. Rad. Res. 2013;54:578–586.
15. Mudahar G S, Sahota H S. Soil; a radiation shielding material. Appl. Rad. Isot. 1988;39:21-24.
16. Singh K, Singh C, Sidhu G S, Singh J, Singh P S, Mudahar G S.Flyash: a radiation shielding material. Ind. J. Phys. 2003;77A:41–45.
17. David P, Dalibor B. Barite mortar with fluid flyash as shielding material. Intersections. 2009;34: 28-34.
18. Temini M, Rahal A M, Yahiaoui R, Jauberthie R. Recycling of flyash in the consolidation of clay soils. Resour. Conserv. Recycl. 1998;24:1-6.
19. Lingling X, Guo W, Wang T, Yang N. Study on fired bricks with replacing clay by flyash in high volume ratio. Constr. Build. Mater. 2005;19:243–247.
20. Gopal S, Sanjeevaiah B. A method to determine the γ-ray attenuation coefficients, Nucl. Instrum. Methods. 1973;107:221.
21. Mann KS, Rani A, Heer M S. Effect of low-*Z* absorber′s thickness on gamma-rayshielding parameters. Nucl. Instrum. Methods A. 2015;797:19-28.
22. Leiva C, Arenas C, Alonso-farinas B, Vilches L.F, Peceno B, Rodriguez-galan M, Baena F. Charcteristics of fired bricks with co-combination fly ashes. J. Build. Engg. 2016; 5:114-116.
23. Gerward I, Guilbert N, Jensen K B, Levring H.WinXcom-a program for calculating X- ray attenuation coefficients. Rad. Phys. Chem. 2004;71:653-654.
24. Berger M J, Hubbell J H. XCOM: Photon cross sections database. Web version 1.2.Gaithersburg, MD 20899, USA: National Institute of Standards and Technology 1999.
25. Mudahar G S, Modi S, Singh M.Total and partial mass attenuation coefficients of soilas afunction of chemical composition. Appl. Rad. Isot. 2004;42:13-18.
26. Medhat E M. Gamma-ray attenuation coefficients of some building materials available in Egypt. Ann. Nucl. Energy. 2009;36:849-852.