J. Appl. Environ. Biol. Sci., 6(9)123-138, 2016
© 2016, TextRoad Publication

ISSN: 2090-4274
Journal of Applied Environmental and Biological Sciences
www.textroad.com

The Power System Stability Boundary for Two-Finite Machine System

Hussein Abdullatif Dghayes

College of Engineering Technology, Janzour Tripoli, Libya

Received: July 22, 2016
Accepted: October 6, 2016

ABSTRACT

Analysis of the stability boundary of power system following a transient disturbance, which distinguish reliably between stable and unstable system that involves the study of large set of non-linear differential equations solved using some computer techniques are based on a two-finite machine, interconnected by passive loads, power system model in which the classical representation is used for each machine and resistance is neglected. There are two different method used in to determine the stability boundary of power system. The first method is the equal-area criterion and second is the phase plane technique, both are compared and the final approaches giving identical results for the simplified model.

1.1 INTRODNCTION

A typical modern power system consists of a large number of generating plants and loads, interconncted through a complex network of transmission and distribution lines.To maintain synchronism between the vaious parts of a power system becomes increasingly diffecult on inteconnection between system continue to grow. The dependence of the modern society on electrical energy requires that major power failure be avoided . The loss of synchronism between generators and concentrated loads, caused by power failures or system faults, presents a potential cause of power failures. In order to evaluate the hazards and to take steps to prevent loss of synchronism, accurate methods of analysis of on-line system stability must be developed and put into use. Current practice usually involves analytical studies which result in system design or operating procedure modifications. Even with the use of modern digital computer modeling, this approach does not fully protect the modern large scale system during emergency fault conditions.

This paper considers the simulation of a proven system, which is modeled by a two-machine equivalent system, during possible fault and erratic operating conditions. A goal is to seek, by analytical investigation, the range of operating limitations for continual safe and reliable operation of such a power system. The basic approach used involves a computer stability simulation of the composite generator and equivalent loads.

The first approach to the problem which gives conservative results is used. This is an extension of the standard procedure used in transient stability studies known as the step-by-step method. The problem may be formulated as follows: given a system initially in a steady operation and assume a disturbance at time t_0. Then the question: is there a stable equilibrium position for the system after the disturbance is cleared , and if so, what the critical clearing time, that is, the maximum time that the per- disturbances may remain, before the system loses its capability to return to steady-state .

1.2 POWER SYSTEMSTABILITY

Stability studies will be divided into three different categories depending on the extent of the disturbance on the system. Steady-state- stability, infinitely small disturbances, small angle changes, time invariant (ΔE_{fd} =0), manual control of voltage no automatic voltage regulator. Dynamic stability, smaller or normal random impacts , system equations are linear (or have been linearized) about an operating point , $\dot{\underline{X}}=\underline{AX}+\underline{Bu}$, eigenvalues of A matrix may be time-varying and that $\underline{u}$ may be used to present several inputs including system load responses, automatic control devices and voltage regulator action ($\Delta E_{fd} \neq 0$), multiple swing (Decay of Oscillations). Transient stability, nonlinear, first Swing cycle is most important, caused by large disturbances, $\dot{\underline{X}}=f(\underline{x}, \underline{u}, \underline{t})$, time solutions, use digital computer .

***Corresponding Author:** Hussein Abdullatif Dghayes, College of Engineering Technology, Janzour, Tripoli, Libya
Dgheyes@yahoo.com

1.3 METHODS OF SIMULATION

The first step in a stability study is to make a mathematical model of the system during the fault. The elements included in the model are those affecting the dynamics of the machines (acceleration or deceleration of the machine rotors). Generally, the elements of the power system that influence the electrical and mechanical torques of the machines should be included in the model. These elements are: The network before, during, and after disturbance . The parameters of the synchronous machines .The loads and their characteristics. The excitation systems .The mechanical turbines and speed governors. System components such as transformers and capacitors.

The complexity of the model depends upon the type of transient and system being investigated in the study. Using the techniques of modern control theory, the system stability of a large nonlinear system can be determined without obtaining the solution of the differential equations. That is, the stability limit can be calculated directly from the system equations and used during system operation.

In this papersthe close relationship of two different methods of analyzing stability boundary will be discussed. These are the classical equal-area criterion, the phase plane trajectories technique. These will be demonstrated for the case of two connected finite machines.

1.4CLASSICAL MODEL

Transient stability studies are performed to determine if system will remain in synchronism subsequent to the occurrences a major disturbance. That is, will the machine rotors remain in synchronism and will they return to a constant speed of operation following the disturbance. Classical stability study assumption are : (1) mechanical power input held constant,(2)damping is neglected, (3)loads are represented by passive impedance,(4)each machine has a constant-voltage behind transient reactance, (5)the mechanical rotor angle of each machine coincides with the angle of the voltage behind transient reactance,(6)machine saturation is neglected.

1.5 POWER SYSTEM REPRESENTATION

The equivalent two-machine power system of Figure 1 will be used as an example (problem 2.18 [1]) in the comparative analysis of the stability boundaries for the two methods. The computations are based on a two-finite machine system model in which the classical representation is used for each machine . The load-flow calculation data is converted to a 100 MVA Base, given in Table 1. Systemequation of motion during transients period goes through the following stages: predisturbed system (b) disturbance system (c) postdisturbed system.

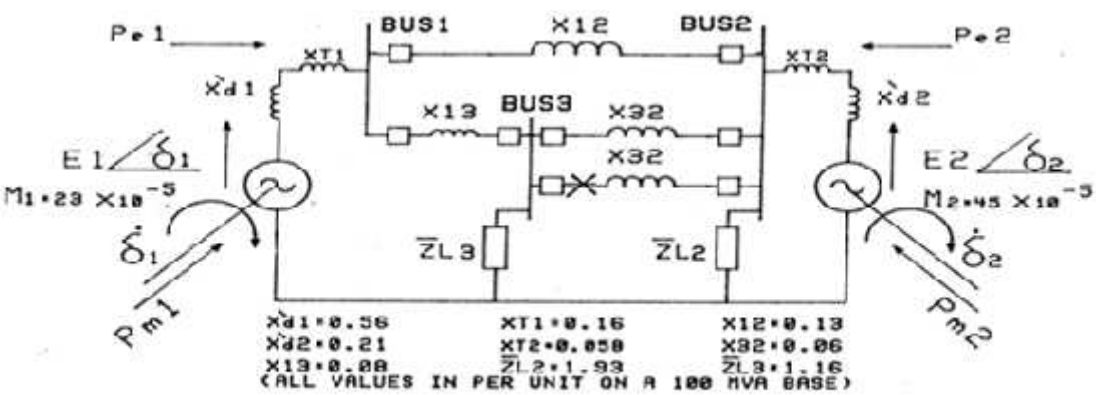

Figure 1 Single –Line Diagram of Two- Finite Machine Power System Model

BUS NO.	VOLTAGE MAG. P.U	ANGLE DEGREE	Load MWMVAR		GENEARTOR MWMVAR	
1	1.03	0	0	0	0.30	0.23
2	1.02	- 0.5	0.80	0.40	1.0	0.37
3	1.018	-1.0	0.50	0.20	0	0

Table 1 Load-Flow Data (on 100 MVA Base)

The form of the swing equation of the two-finite- machine the system during the previous three stages will be the same as that given by Eq. (1), except for the difference in the input output power from one stage to another .

$$M\ddot{\delta} = P_{a12} = \left(P_{m12} - P_{e12}\right) \tag{1}$$

The equation of electrical power output from a machine is given by

$$P_{ei} = E^2{}_i G_{ii} + \sum_{\substack{i=1 \\ j\neq i}}^{n} E_i\ E_j\ Y_{ij}\ \cos\left(\theta_{ij} - \delta_i + \delta_j\right) \tag{2}$$

$$P_{e1} = 0.094 + 1.16\cos(77.4° - \delta_1 + \delta_2) \tag{3}$$

$$P_{e2} = 0.698 + 1.16\cos(77.4° - \delta_2 + \delta_1) \tag{4}$$

Since $$P_{e12} = \left(\frac{M_2 P_{e1} - M_1 P_{e2}}{M_1 + M_2}\right) \tag{5}$$

Where $M_1 = 23\times10^{-5}\,\text{sec}^2./\text{ele deg.}$, $M_2 = 45\times10^{-5}\,\text{sec}^2./\text{ele deg.}$

Then $$P_{e12} = -0.177 + 1.135\sin\,(\delta_{12} + 4.1°) \tag{6}$$

The power angle characteristic is a sine function of δ between the two rotors as plotted in Figure 2. The maximum power that can be transmitted under rated operating condition occurs at a torque angle of $(\delta_{12} + \gamma)$=−90°, where $\gamma = 4.1°$ and δ_{12}=−94.1°.This sine curve is displaced from the origin vertically by an amount P_c , which represents the power dissipation in equivalent network , and horizontally by the angleγ, which is the real component of the transfer admittance Y_{12}. The system is stable only if the torque angle δ is in the range from (−90° to +90°) , in which the slope dp /dδ is positive , so that an increase in torque angle results in an increase in transmitted power .

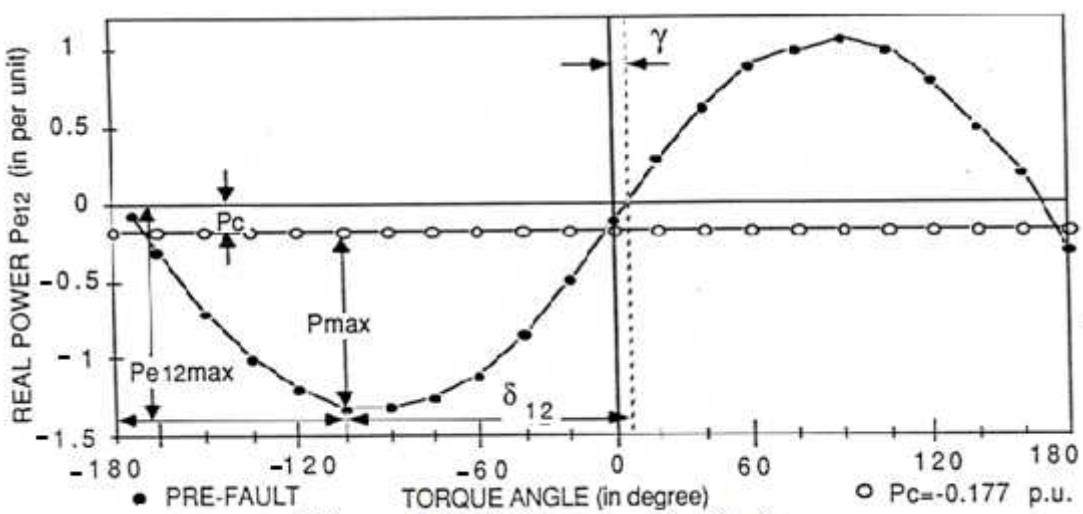

Figure 2 Prefault power-Angle Curve

So the maximum power resulting is

$$P_{e12max} = -0.177 + 1.135 \sin(-94.1°) \quad (7)$$

$$P_{e12max} = -1.31 \text{ P.u occurs at } \delta_{12} = (-94.1°) \text{ or } (-1.642 \text{ rad.})$$

And the steady state synchronous speed , $P_{m12}=P_{e12}$, is

$$P_{m12} = \left(\frac{M_2 P_{m1} - M_1 P_{m2}}{M_1 + M_2} \right) = -0.1452 \text{ P.u} \quad (8)$$

$$-0.1452 = -0.177 + 1.135 \sin(\delta_0 + 4.1°)$$

$$\arcsin(\delta_0 + 4.1°) = 0.0318 \Rightarrow \delta_0 = -2.5° (0.0436 \text{ rad.})$$

The disturbance to be considered is permanent three-phase fault which occurs near bus number 3 at the end of line 5. The power angle characteristic for disturbed and postdisturbed system are sin wave having smaller amplitudes than that for the predisturbed system.

Predisturbed system $P_{e12} = -0.177 + 1.135 \sin(\delta_{12} + 4.1°)$

Disturbed system $P_{e12} = -0.0026 + 0.061 \sin(\delta_{12} + 1.0°)$

Postdisturbed system $P_{e12} = -0.1670 + 1.120 \sin(\delta_{12} + 4.3°)$

The steady-state values of Pe_{12}, δ and $(d^2\delta/d^2t)$ for the stable post disturbance system are:

$$P_{m12} = P_{e12} (\text{seady state}) = -0.1452 \text{ P.u}$$

$$-0.1452 = -0.167 + 1.12 \sin(\delta_{ss} + 4.3°)$$

$$\arcsin(\delta_{ss} + 4.3°) = 0.0218 \Rightarrow \delta_{ss} = -3.2° (-0.0558 \text{ rad.}) \Rightarrow \text{and} \frac{d^2\delta_{ss}}{dt^2} = 0$$

From the power -angle digram shown in Figure 5 $.\delta_{max.} = (-\pi - \delta_{ss})$

$$\delta_{max.} = -176.8° (-3.0857 \text{ rad. })$$

The analysis of first-swing classical transient stability constitute the important tools for judging system performance. The reason for its relative importance is that if the system is stable on first swing, it will for most cases be stable on the subsequent swings. The torque angle δ is calculated as a function of time over a period long enough determine whether δ will to increase without limit or reach a maximum and start to decrease.

Numerical methods for solution of differential equations, the methods most commonly used for the solution of the differential equations are: Euler method, the modified-Euler method, Runge-Kutta and the trapezoidal method. Each of these has advantages and disadvantages which are associated with numerical stability, time-step size, computational effort per integration step and accuracy of the obtained solutions.

Plotting the swing curves of the two-finite machine system. For clearing at 0.1 second the solution is obtained by use of Turbo Pascal program with the modified-Euler method procedure. So the numerical solution of the swing equation for the two generator , three-bus power system is made by digital computer for 2.0 second of simulated real time , for the intervals of 0.05 sec. Figure 3 shows the rotor angles of the two machine Vs. time . A plot of the rotor angle differences is shown in Figure 4 and the fault is cleared in six cycles. It follows that the system is stable. The rotor angle difference reach value of (–11.67°) and then decrease. This is the value of δ_{12} at t=0.2sec. Note that the solution is carried out for three swings to show that the subsequent swings are not greater than the first so that the system appears to be stable. But in the case of the angle differ increase indefinitely, the system is unstable because both machine will loss synchronism.

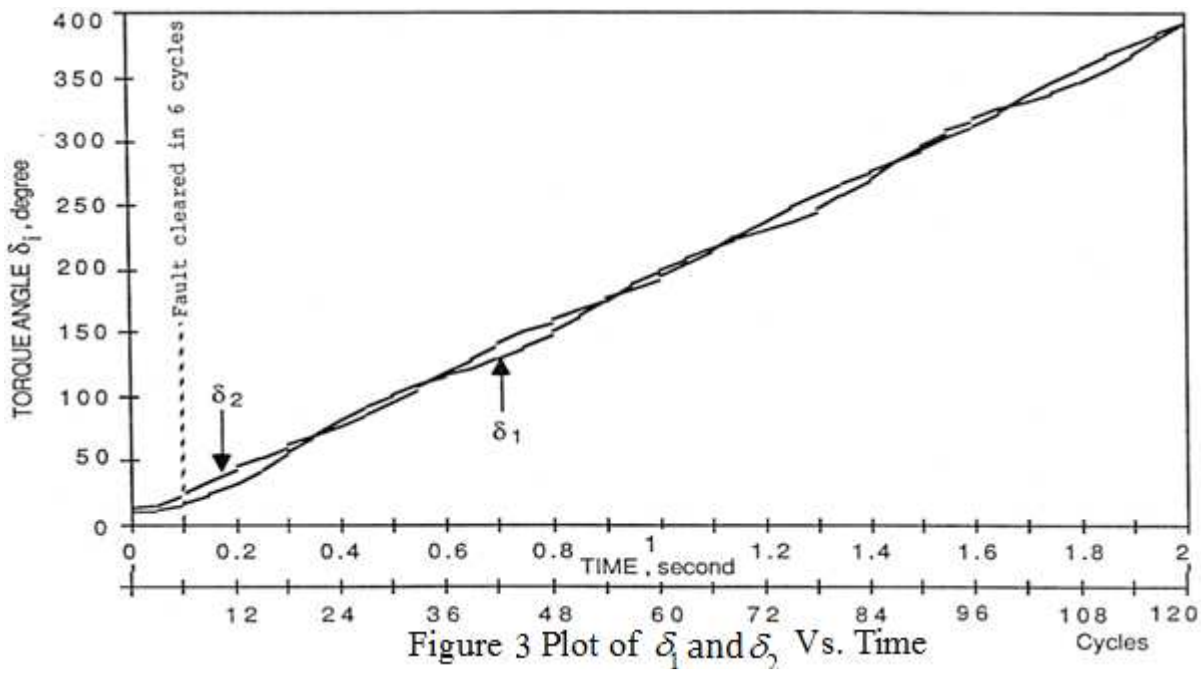

Figure 3 Plot of δ_1 and δ_2 Vs. Time

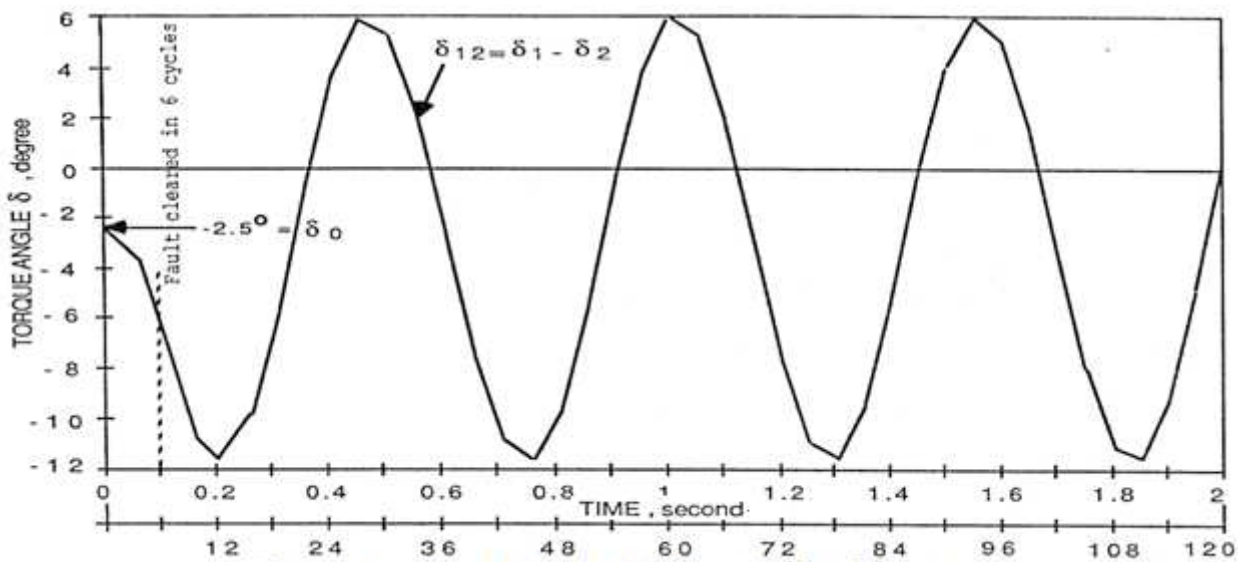

Figure 4 Plot of Delta Differences $(\delta_1 - \delta_2)$ Vs. Time

1.6STABILITY DOMAIN

To study the stability domain of a power system during a fault, the first method is power-angle characteristics and the equal-area criterion are shown in Figure 5 , for condition before, during, and after a three phase fault . The horizontal line denoted by P= Pm_{12} represents the equivalent mechanical power input to machine. Before occurrence of the fault , the two the machine were operating at synchronous speed with a rotor angle at t=0 is $\delta_0 = -2.5$ degree as indicated by the intersection of Pm_{12} with the prefault curve, this operating point (δ_0, Pe_0) is designated by the letter **a** . Once the 3phase fault has occurred , the electrical power Pe_{12} of the system increases to a value corresponding to point **b**, at which $Pe_{12} = (Pe_{12(b)} - Pm_{12})$, this results in a decrease in both $d\delta/dt$ and δ . As δ continues to decreases the system remains disturbed , the power angle trajectory moves along the faulted power angle curve form point **b** toward point **c** the fault is cleared , at which time for this case, Pe_{12} decreases to 0.85 p.u ($\delta_c = 143°$ as indicated by point **d** in the figure) .

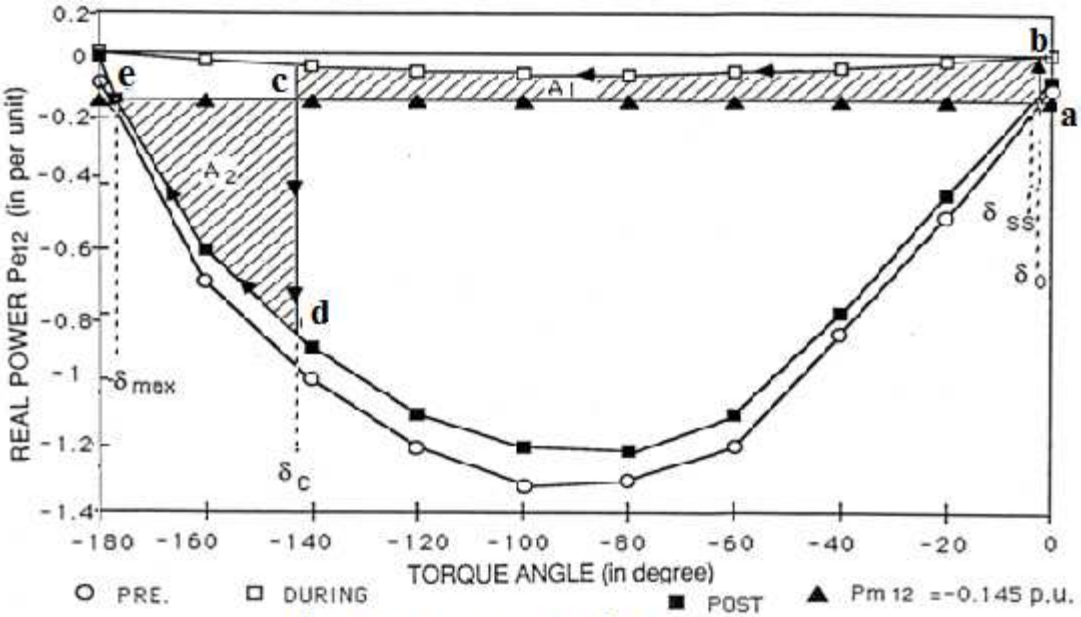

Figure 5 Power- Angle Curve

The area A_1 in the figure is proportional to the kinetic energy (K.E) of the system during the period when the fault occurs and is cleared. As δ continues to decrease, the power angle trajectory moves along the postfaulted power angle sine curve from point **d** toward point **e** for which $\delta_{max.}$ is $-176°$. When this point is reached,

$$\frac{d\delta}{dt} = \sqrt{\frac{2}{M} \cdot \int_{\delta_0}^{\delta_c} P_{a12} d\delta} = 0 \qquad (9)$$

At this point the K.E. of the equivalent finite machine has re- turned to its prefaulted value , Δ K.E =0

At point **e** , the area A_2 bounded by $Pe_{12} = Pm_{12}$ and $Pe_{12} = Pc + Pmax. Sin[\delta + \gamma(post)]$, $\delta_c \le \delta \le \delta_{max.}$, is equal to the area A_1 bounded by $Pe_{12} = Pm_{12}$ and $Pe_{12} = Pc + Pmax. Sin[\delta + \gamma(during)]$,

$$\delta_0 \le \delta \le \delta_c .$$

There exists a $(\delta = \delta_c)$, $(\delta_0 \le \delta \le \delta_{max.})$, such that in terms of the equal-area criterion of stability, area A_1 is equal to A_2, and the system is stable , the value of δ_c is determined as follows:

$$A_1 = \int_{\delta_0}^{\delta_c} \left(P_{m12} - \left[P_c + P_{max.} \cdot \sin\left(\delta + \gamma_{(during)}\right)\right]\right) d\delta \tag{10}$$

Let $x = \delta + \gamma \quad \Rightarrow \quad dx = d\delta$

$$A_1 = \int_{(\delta_0+\gamma)}^{(\delta_c+\gamma)} \left(-0.1452 + 0.0026 - 0.061 \operatorname{Sin} x\right) dx \tag{11}$$

$$A_1 = -0.1452\delta_c - 0.0547 + \operatorname{Cos}(\delta + 0.33°) \tag{12}$$

$$A_2 = \int_{\delta_c}^{\delta_{max.}} \left[\left(P_c + P_{max.} \cdot \sin(\delta + \gamma_{(Post)})\right) - P_{m12}\right] d\delta \tag{13}$$

$$A_2 = \int_{(\delta_c+\gamma)}^{(\delta_{max.}+\gamma)} \left[-0.167 + 0.1452 + 1.12 \operatorname{Sin} x\right] dx \tag{14}$$

$$A_2 = 0.0218\delta_c + 1.177 + 1.12 \operatorname{Cos}(\delta_c + 4.3°) \tag{15}$$

$$A_1 = A_2 \quad \Rightarrow$$

$$-0.1452\delta_c - 1.056 \operatorname{Cos} \delta_c + 0.084 \operatorname{Sin} \delta_c - 1.232 = 0 \tag{16}$$

From the power-angle diagram shown in Figure 5 the critical clearing angle is located between δ and $\delta_{max.}$. Since Eq. (16) is nonlinear, $\delta_c = -143°$ degrees (−2.495 radius) was found by using trial and error .

If the fault clearing is delayed long enough so that the quality of the two area cannot be satisfied , the two-finite machine speed will not decrease to a synchronous value as long as the machines remain electrically tied to each other . The torque angle δ will decrease monotonically without bound beyond the maximum value possible for a marginally stable swing , $\delta_{max.}$. By the time δ reaches a value of −180° degree, synchronism is lost and the machines must be disconnected [5] .

2.1 PHASE PLANE TRAJECTORIES AND THE STABILITY BOUNDARY

This technique provides a useful tool for studying the stability of a system which is described by a second-order differential equation or a group of such systems. The swing equation of the power system prefault, during fault, and post fault is given by Eq. (1). To form the phase plane, a equation(1) is converted into two first-order differential equations with the time t suppressed .

Let $$\dot{X}_1 = X_2 \tag{17}$$

$$\dot{X}_2 = \frac{\left(P_{m12} - P_{e12}\right)}{M} \tag{18}$$

Where $X_1 = (\delta - \phi)$, $\phi = \left(\delta_{SS} + \gamma\right)$ and $X_2 = \dot{\delta}$

From the steady-state values of Pe_{12}, δ and $(d^2\delta/d^2t)$,the stable post disturbance system is

$$P_{m12} = P_{e12} \ \text{(steady-state)}$$

$$P_{m12} = P_{e12} = P_c + P_{max.} \ . \ \sin(\delta_{ss} + \gamma) \tag{19}$$

$$\delta_{ss} = \left[\arcsin\left(\frac{P_{m12} - P_c}{P_{max.}} \right) - \gamma \right] \tag{20}$$

$\delta_{ss} = -3.2°(-0.0558\,\text{rad.})$, and $\frac{d^2\delta}{dt^2} = 0$ (as found previously for the post-fault power system model).

A phase plane plot is a plot of X_2 Vs. X_1 , as shown in Figure 6 . As the time t increases the two- tuple [$X_1(t)$, $X_2(t)$] describes the trajectory in the phase plane . Since stability of the postfault system is the basic issue of concern, finding the stable equilibrium point (the origin of the phase plane) is important, since this point is the steady state value for postdisturbed system.

The state equation for the post-fault system is :

$$\dot{X}_1 = X_2 \tag{21}$$

$$\dot{X}_2 = \left[P_{m12} - P_c - P_{max.} \ . \ \sin(X_1 + \phi) \right] / M \tag{22}$$

Since $\dot{X}_1 = X_2 \ \Rightarrow S(X_1, X_2) = X_2$ (23)

$$\dot{X}_2 = \left[P_{m12} - P_c - P_{max.} \ . \ \sin(X_1 + \phi) \right] / M \ \Rightarrow$$

$$Q(X_1, X_2) = \left[P_{m12} - P_c - P_{max.} \ . \ \sin(X_1 + \phi) \right] / M \tag{24}$$

Then the state equilibrium singular point is :

$$S(X_1, X_2) = 0 \ \Rightarrow X_2 = 0 \tag{25}$$

$$Q(X_1, X_2) = \left(\left[P_{m12} - P_c - P_{max.} \ . \ \sin(X_1 + \phi) \right] / M \right) = 0 \tag{26}$$

$$(X_1 + \phi) = \arcsin \frac{(P_{m12} - P_c)}{P_{max.}} = n\pi \tag{27}$$

Where $n = 0, 1, 2, ...$

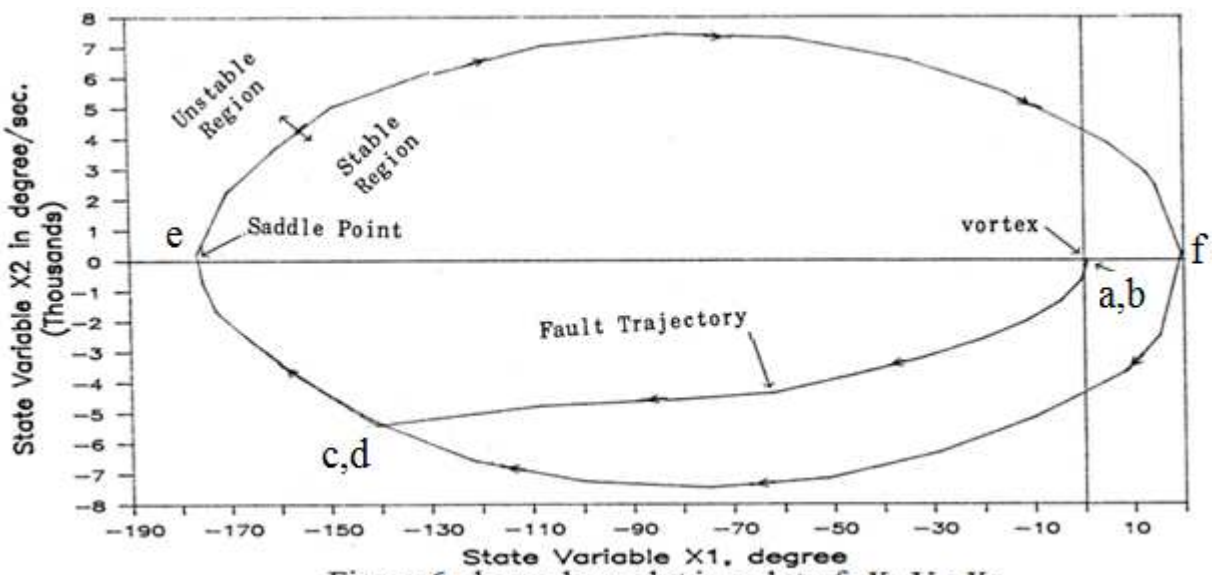

Figure 6 phase plane plot is a plot of X_1 Vs. X_2

The singular point is chosen for n = 0,which defines the state variables, X_1 and X_2, such that the origin of the phase plane is the stable equilibrium point of the post-fault system .
The equilibrium states of a system are defined as:

$$\begin{bmatrix} \frac{\delta S}{\delta X_1} & \frac{\delta S}{\delta X_2} \\ \frac{\delta Q}{\delta X_1} & \frac{\delta Q}{\delta X_2} \end{bmatrix}$$

It is necessary to evaluate the equilibrium states of the system at singular points. This is done by testing the stability of the system by determining the nature of the roots. If positive real roots exist, the system is unstable for the given operation conditions if no positive real roots exist the system is stable.

$$\begin{bmatrix} 0 & 1 \\ P_{max.}\cos\delta & 0 \end{bmatrix}_{(0,0)}$$

Now, the stability of the system is from

$$\begin{bmatrix} -\lambda & 1 \\ P_{max.} & -\lambda \end{bmatrix}_{(0,0)} = \lambda^2 - P_{max.} \Rightarrow \lambda = \pm\sqrt{P_{max.}}$$

The result is two real roots with opposite signs. Then point e on the phase plane is an unstable singular point being a saddle point singularity of the trajectories.

The state equations for each system are :

Pre-fault system

$$\dot{X}_1 = X_2 \tag{28}$$

$$\dot{X}_2 = \left[P_{m12} - \left(P_c + P_{max.} \cdot \sin(\delta + \delta_{ss} + \gamma_{(Pre)})\right)\right] / M \tag{29}$$

During fault system

$$\dot{X}_1 = X_2 \tag{30}$$

$$\dot{X}_2 = \left[P_{m12} - \left(P_c + P_{max.} \cdot \sin(\delta + \delta_{ss} + \gamma_{(during)})\right)\right] / M \tag{31}$$

Post-fault system

$$\dot{X}_1 = X_2 \tag{32}$$

$$\dot{X}_2 = \left[P_{m12} - \left(P_c + P_{max.} \cdot \sin(\delta + \delta_{ss} + \gamma_{(Post)})\right)\right] / M \tag{33}$$

δ will decrease monotonically without bound beyond the maximum value possible for a marginally stable swing , $\delta_{max.}$

These equations are plotted in the phase plane with torque angle δ at its minimum value ($\delta_{min.} = 19°$ as indicated by point f in Figure 7). Figure (7) illustrates the relationship between power-angle and the phase plane trajectories for a marginally stable case . The prefault operating point (δ_0, Pe_0) is designated by the letter a in the figure, the power system is in a state of equilibrium with (δ and $d\delta/dt = 0$), this point in the phase plane is a stable singular point called a stable node or a vortex. When the 3-phase fault occurs at t $= t_0^+$, the electrical output power of the system Pe_{12} increases to a value corresponding to point b , this results in a decrease in speed deviation $d\delta/dt$ the and the torque angle δ. This decrease is depicted in the phase plane fault trajectory between δ_0, and δ_c . In the marginally stable case , fault clearing is delayed long enough to permit the system torque angle δ to decrease to the critical value δ_c at which time the faulted line is isolated from the system. For fault clearing torque angles greater than δ_c , the post-fault system will be unstable . At the time the fault is cleared (at t =0.1 sec. corresponding to $\delta = \delta_c$) the output pover Pe_{12} decreases from the value of -0.5 to -0.85 p.u , δ continues to decrease along the phase plane post-fault trajectories from point c and d (at which $\delta = \delta_c$) toward point e . Point e ($\delta = \delta_{max.}$) is an unstable singular point which is saddle point of the trajectories. For a the conservative system under study, as δ increases a path is then formed along the phase plane maximum trajectory in clockwise direction from point e to point f as show in the Figure 7 .

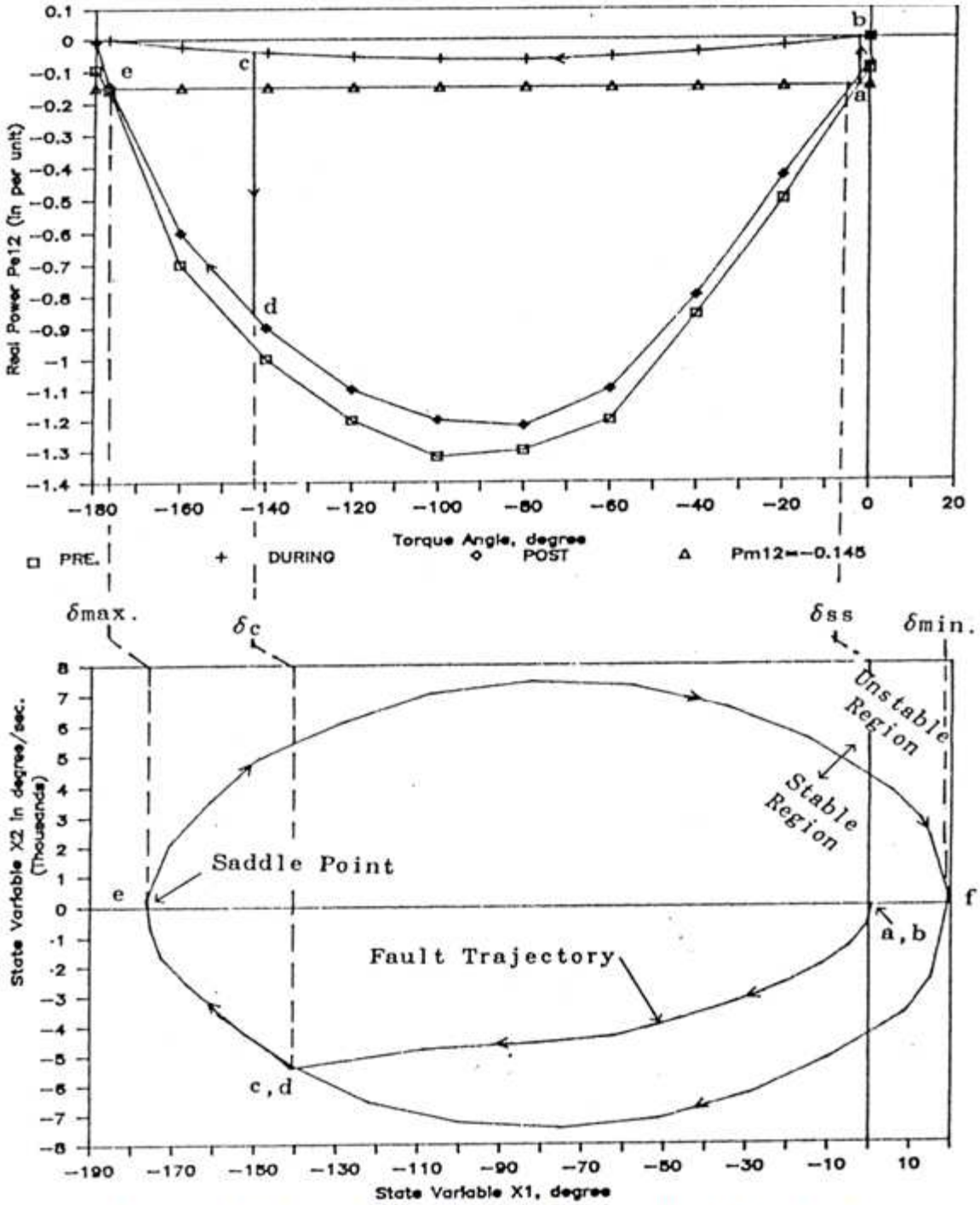

Figure 7 Power –Angle Curves And phase plane Trajectory

Referring to Figure (7), $\delta_{min.}$ can be determined from the equal-area criterion, using post-fault power-angle curve such that:

$$\int_{\delta_{min.}}^{\delta_{ss}} \left(P_{m12} - \left(P_c + P_{max.} \,.\, \sin(\delta + \gamma_{(Post)})\right)\right) d\delta \tag{34}$$

$$= \int_{\delta_{ss}}^{\delta_{max.}} \left(\left(P_c + P_{max.} \,.\, \sin(\delta + \gamma_{(Post)})\right) - P_{m12}\right) d\delta \tag{35}$$

Let $X = (\delta + \gamma) \quad \Rightarrow \; dx = d\delta$

$$\int_{(\delta_{ss}+\gamma)}^{(\delta_{max.}+\gamma)} \left(-0.167 + 1.12 \mathrm{Sin} X + 0.1452\right) dx = -02.16 \text{ p.u} \tag{36}$$

$$\delta_{min.} = 19° (0.332 \text{rad.}) \tag{37}$$

The critical clearing timet_{cr} can be determined from (9), using numerical integration techniques:

$$t_{cr} = \int_{\delta_0}^{\delta_c} \frac{d\delta}{\sqrt{\frac{2}{M} \,.\, \int_{\delta_0}^{\delta} P_{a12} d\delta}} \tag{38}$$

$$t_{cr} = \int_{\delta_0}^{\delta_c} \frac{d\delta}{\sqrt{\frac{2}{M} \,.\, \int_{\delta_0}^{\delta} (P_{m12} - P_{e12}) d\delta}} \tag{39}$$

Where

$$P_{e12} = \left(P_c + P_{max.} \,.\, \sin(\delta + \gamma_{(dur.)})\right) \tag{40}$$

$$\int_{\delta_0}^{\delta} P_{e12} d\delta = \int_{\delta_0}^{\delta} \left(P_{m12} - \left(P_c + P_{max.} \,.\, \sin(\delta + \gamma)\right)\right) d\delta \tag{41}$$

$$t_{cr} = \int_{\delta_0}^{\delta_c} \frac{d\delta}{\sqrt{\frac{2}{M} \,.\, \int_{\delta_0}^{\delta} (P_{m12} - P_C)(\delta - \delta_0) + P_{max.}(\cos\delta - \cos\delta_0)}} \tag{42}$$

$$t_{cr} = 0.1 \text{ second}$$

2.8 STABILITY BOUNDARY

The system is considered stable as long as the trajectories follow the separatrix determined by the phase plane (as shown in Figure 6). The equation for the separatrix can be determined from the post-fault system differential equation of motion:

$$M\frac{d^2\delta}{dt^2} = P_{a12} = P_{m12} - P_{e12} \tag{43}$$

Since $$\frac{d}{dt}.\left[\frac{d\delta}{dt}\right]^2 = 2\left[\frac{d\delta}{dt}\right].\frac{d}{dt}.\left[\frac{d\delta}{dt}\right] \Rightarrow \quad d.\left[\frac{d\delta}{dt}\right]^2 = 2\,d\delta\frac{d^2\delta}{dt^2} \tag{44}$$

Then $$\frac{1}{2}.\frac{d}{d\delta}.\left[\frac{d\delta}{dt}\right]^2 = \frac{d^2\delta}{dt^2} \tag{45}$$

Substituting Eq. (45) for $\frac{d^2\delta}{dt^2}$ in Eq. (43), the differential one-form is obtained.

$$\frac{M}{2}.\frac{d}{d\delta}.\left[\frac{d\delta}{dt}\right]^2 = \left(P_{m12} - \left(P_c + P_{max.}.\sin\delta\right)\right) \tag{46}$$

$$d.\left[\frac{d\delta}{dt}\right]^2 = \frac{2}{M}\left(P_{m12} - \left(P_c + P_{max.}\ .\ \sin\delta\right)\right)\,d\delta \tag{47}$$

In term of the state variable , X_1 and X_2 ,

$$d(X^2{}_2) = \frac{2}{M}\left(P_{m12} - \left(P_c + P_{max.}\ .\ \sin(X_1 + \phi)\right)\right)dX_1 \tag{48}$$

Integration is performed to obtain the general solution for a post-fault system phase plane trajectory:

$$X^2{}_2 - \frac{2}{M}\left(P_{m12} - \left(P_c + P_{max.}\ .\ \sin(X_1 + \phi)\right)\right) + C = 0$$

The constant of integration c is evaluated at the saddle point of the separatrix , which is $(\delta_{max.} - \phi, 0)$.

$$C = \frac{2}{M}\left[(P_{m12} - P_c)(\delta_{max.} - \phi) + P_{max.}\ .\mathrm{Cos}\,\delta_{max.}\right] \tag{49}$$

The stability boundary of the post-fault system , is

$$X^2{}_2 - \frac{2}{M}\left(P_{m12}(X_1) - P_c(X_1) + P_{max.}\ .\ \sin(X_1 + \phi)\right)$$
$$+ \frac{2}{M}\left[(P_{m12} - P_c)(\delta_{max.} - \phi) + P_{max.}\ .\mathrm{Cos}\,\delta_{max.}\right] \tag{50}$$

and $$X^2{}_2 + \frac{2}{M}\left[(P_{m12} - P_c)(\delta_{max.} - \phi - X_1)\right.$$
$$\left. + P_{max.}.\left(\mathrm{Cos}\,\delta_{max.} - \mathrm{Cos}(X_1 + \phi)\right)\right] \tag{51}$$

$$(\delta_{min.} - \phi) \le X_1 \le \delta_{max.} - \phi) \tag{52}$$

The results obtained by this method agrees with that determined by the equal-area method.

The post-fault system trajectories illustrated in Figure (8), were generated by varying the fault clearing time (t_{fc}). If the fault is cleared in time at which $t_{fc} \leq t_{cr}$, operation will be stable along a curve as indicated in the figure for the three stable phase plane trajectories, being confined to the phase plane region enclosed by the stability boundary. For a sustained fault or for a longer delay in clearing time at which $t_{fc} > t_{cr}$, the faulted trajectory will enter the unstable region as shown in the figure for the two unstable phase plane trajectories by the dotted curve.
Since the power system under investigation is a conservative system (no damping), the stable trajectories are closed trajectories. For stable trajectories in a non conservation system$X(t) \rightarrow 0$ as $t \rightarrow \infty$

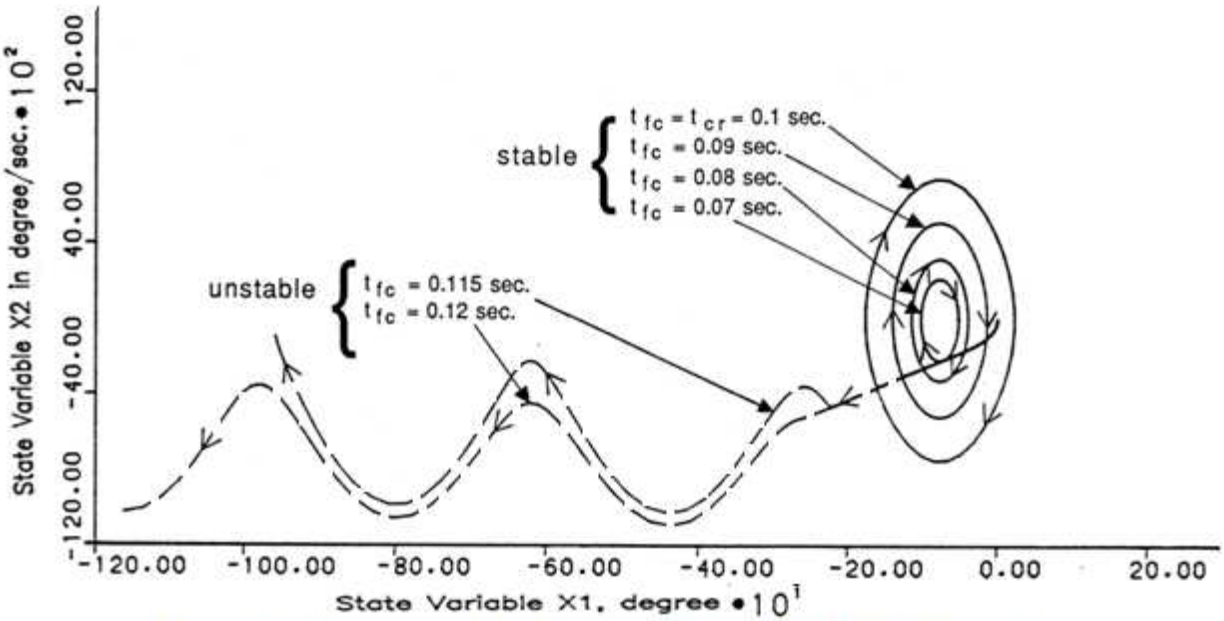

Figure 8 Plot of Stable and Unstable phase plane trajectories

GLOSSARY OF SYMBOL

Symbol	Quantity
A , B	State vectors
C	Constant of integration
D	Damping constant
E_{fd}	Generator field voltage
E_{ex}	Exciter voltage
E_i	Generator ith terminal
E_j	Voltage generator jth, terminal
G_{ii}	The sum of the admittance connected to node i
H	Constant of the machine
K	Maximum value of V(X) on the stability boundary
M	Inertia constant of the machine
MW	Megawatts
MVA	Megavolt ampere
MVAR	Megaras
max.	Maximum
min.	Minimum
MAG	Magnitude
P	Real power
P_a	Accelerating power
P_c	Dissipating power
P_e	Electrical power
$\dot{P}_m$	Governor action

P_m Mechanical power
$P_{max.}$ Maximum power transfer
p.u Per unit
rad. Radian
r State vector
Q, S Liner operator
Sec. Second
t Time
t_{cr} Critical clearing time
t_{fc} FaultCritical clearing time
ω Machine speed in rad. /sec.
$\underline{X}$ State vector
X_1 State variable in deg.
X_2 State variable in deg. /sec.
$\bar{X}_q$ Direct-axis transient reactance
X_T Transformer reactance
X_L Transmission line reactance
Y_{ij} Admittance between node i and node j
Z_L Load impedance
α ,β Completing the square constant
ϕ The sum of the steady-state torque angle and the real component of transfer admittance
γ The real component of the transfer admittance Y_{12}
□ System torque angle
$\dot{\delta}$ Angular speed deviation
□̈ Acceleration
□$_0$ Predisturbed system □
□□□. Minimum value of □ for a marginally stable condition
□□□. Maximum value of □ for a marginally stable swing
□□ Steady-state torque angle
π P_i=3.141592654 rad.
θ_{ij} Angle between node i and node j
λ Engenvalue

<u>Subscripts</u>

1 Denotes to generator one
2 Denotes to generator two
12 Denotes the system equivalent power value
0 Denotes pre-fault system value (degree or initial)
SS Denotes the steady-state post-fault system value

2.8 CONCLUSIONS

The power system stability boundary for the two-finite machine system scheme, resulting knowledge gained from system which has been studied in this paper, allows a number of general conclusions to be drawn concerning the effect on stability of certain concepts used in power system design, apparatus design, and power system operation . The effect of system modifications must be analytically observed before a fault, during a fault, and after fault clearance. Experience has shown that some design changes improve stability during all three conditions, while other modifications are helpful during one condition and detrimental during other changes.

Both methods studied in this paper, are compared and the final approaches giving identical results for the simplified model. These two methods equal- area criteria and phase-plane trajectory, however, are suitable for a two-machine system. There is still much further research can be done using stability analytical tool known as the second or the direct method of Liapunov for getting a larger, more accurate, region of stability boundary of power system.

REFERENCES

1. Anderson, P.M., and A. A. Fouad, Power system control and stability, vol.1. The Iowa State University Press, Ames. Iowa, 1977
2. Stevenson, D., Elements of Power System Analysis 4th Edition Mc Graw-Hill, New York, 1982.
3. Gless, G.E. The Direct Method of Liapunov Applied to Transient Power system IEEE Transactions. PAS-85, 1966.
4. Wall, E.T. "A Topological Approach To The Generation of Liapunov Functions." Acta Technica Csav, Prague, Czachos lovakia, No.2, 1968.
5. Roemish, W.R. A New Synchronous Generator Out-of-Ste Relay scheme Ph.D. Dissertation, University of Colorado At Boulder, 1981.
6. Meyer, J.c. Control Principles And Application Modern
   McGraw-Hi11 New York, 1968.
7. Jordan, D w., and P.Smith, Non Linear ordinary Differential Equations
   2nd edition. Oxford University Press, New York, 1987 of control systems,
8. Ogata, K., State-Space Analysis of Control System, Prentice-Hall. Englewood cliffs, N.J. 1967.