J. Appl. Environ. Biol. Sci., 7(10)78-85, 2017

ISSN: 2090-4274

Journal of Applied Environmental and Biological Sciences
www.textroad.com

Thyroid Diseases Forecasting Using a Hybrid Decision Support System Based on ANFIS, k-NN and Information Gain Method

Waheed Ahmad[1], Lican Huang[1,*], Ayaz Ahmad[2], Farooq Shah[3], Amjad Iqbal[3], Asma saeed[4]

[1]Department of Computer Science, School of Informatics, Zhejiang Sci-Tech University Hangzhou, China
[2]Department of Biotechnology, Abdul Wali Khan University Mardan 23200. Khyber Pakhtoonkhwa, Pakistan
[3]Department of Agriculture, Abdul Wali Khan University Mardan 23200. Khyber Pakhtoonkhwa, Pakistan
[4]Department of Biological Sciences, Gomal University, Dera Ismail Khan 29050, Pakistan

Received: May 30, 2017
Accepted: August 22, *2017*

ABSTRACT

New statistical analysis and data mining techniques are utilized by researchers to develop tools that help healthcare professionals to easily and efficiently diagnose thyroid related diseases. Useful knowledge can be extracted from the databases where a significant amount of relevant data is stored. A new decision-based hybrid system for the diagnosis of thyroid diseases is presented in this article. The proposed system consists of three stages. in the first stage, 25 features of the dataset (retrieved from the University of California Irvin machine learning repository) were reduced using Information Gain method to avoid data redundancy and reduce computation time. In the second stage, the missing values in the dataset are dealt with k-Nearest Neighbor (k-NN) weighting pre-processing scheme. Finally, the resultant data is provided as input to Adaptive Neuro-Fuzzy Inference System for the purpose of input-output mapping in the last stage of our proposed system. Classification accuracy for the proposed approach was calculated to be99.1%, whereas sensitivity and specificity results were 94.77% and 99.70%, respectively. Our approach is able to get highest classification accuracy with minimum possible features of the dataset and can be applied to diagnose other lethal diseases.

KEYWORDS: Adaptive Neuro Fuzzy Inference System; Diagnosis; Feature extraction; Information Gain; k-NN; Thyroid disease.

1. INTRODUCTION

The thyroid is an important gland located in the lower neck which produces a hormone that influences every cell, tissue, and organ of the human body by regulating body's metabolism. Triiodothyronine (aka t3) and levothyroxine (aka t4) are two active thyroid hormones produced by the thyroid gland, that play important roles in the production of proteins, body temperature regulation and overall energy production[1]. Feeling extreme fatigue, depression, forgetfulness, and weight gain are some of the symptoms of less thyroid hormone production in the body[1, 2]. This condition is called hypothyroidism[3, 4].While in hyperthyroidism[5], the thyroid produces more than required hormone thus body uses energy faster than it should and starts to indicate symptoms of irritability, nervousness, muscle weakness, unexplained weight loss, sleep disturbances and vision problem. Untreated hyperthyroidism increases the risk of developing osteoporosis (fragile bones), arterial fibrillation (abnormal heart rhythm), cardiomyopathy (weak heart), angina, heart failure and some pregnancy complications for pregnant women[6, 7].
Another very common genetic thyroid disease which affects 1% of the world population is an auto-immune disorder, called Graves' disease. Severe thyroid disease condition can cause unrecoverable cancer. In a significant number of cases due to underestimating thyroid disorders, for instance, thyroid storm and myxedema coma, may lead to death. Thyroid storm is an episode of severe hyperthyroidism and myxedema coma is the last stage of untreated hypothyroidism[6, 8].
According to a survey, 20 million people are suffering from some form of thyroid disease and up to 60% of them don't know that they have thyroid disease. The number of women having thyroid disease is eight times more than men. Undiagnosed or inadequately treated hypothyroidism may cause miscarriage, preterm delivery and severe developmental problems in children in pregnant women [4, 6].
Several methods have been used for the thyroid disease diagnosis. Serpen et al.,used Learning Vector Quantizer (LVQ) and Probabilistic Potential Function Neural Network (PPFNN) for the test data[9]. Ozyilmaz and Yildirim presented Multi-Layer Perception with Back-Propagation (MLP), Adaptive Conic Section Function Neural Network

***Corresponding Author:** Lican Huang, Department of Computer Science, School of Informatics, Zhejiang Sci-Tech University Hangzhou, China. 008615314651479, Email: licanhuang@zstu.edu.cn

(CSFNN) and Radial Basis Function (RBF) using 3 fold cross-validation[10]. Pasi proposed DIMLP approach with two hidden Layers and default learning parameters, Linear Discriminate Analysis (LDA), C4.5 with default learning parameters (C4.5-1), C4.5 with parameter c equal to 95 (C4.5-3) and C4.5 with parameter c equal to 5 (C4.5-2) [11]. Polat et al. first used 10 fold cross validation and proposed Artificial Immune Recognition System (AIRS) then with average 3 fold cross validation presented AIRS with Fuzzy weighted pre-processing [12]. Kele et al., presented an expert system for thyroid diagnosis with Neuro Fuzzy classification [7]. Multilayer Perception with Levenberg-Marquardt algorithm was proposed by Temurtas[13]. Dogante Kin et al. used Generalized Discriminant Analysis[14] and Wavelet Support Vector Machine systems whereas Hl Chen et al discussed FS-PSO-SVM with 10 fold cross validation for the diagnosis of thyroid diseases [15].

1.1. Proposed system

For the diagnosis of thyroid related diseases, a proper understanding of thyroid data is indispensable beside complementary investigation and clinical examination. Fuzzy classifiers, pattern recognition techniques and various other methods have been investigated to interpret thyroid data and fit the patient into a well-defined status.

This study proposes a new technique utilizing three different systems in order to diagnose thyroid diseases. The proposed expert decision support system block diagram is shown in Fig.1. The dataset for thyroid data was retrieved from UCI machine learning repository. Features were reduced using information gain method for the next phase. The obtained reduced features based dataset was preprocessed using k-NN algorithm for missing data values in order to improve classification accuracy of the system. The pre-processed data was then divided into training and testing sets for adaptive neuro fuzzy inference system. The classification analysis and confusion matrix described the accuracy of the proposed system.

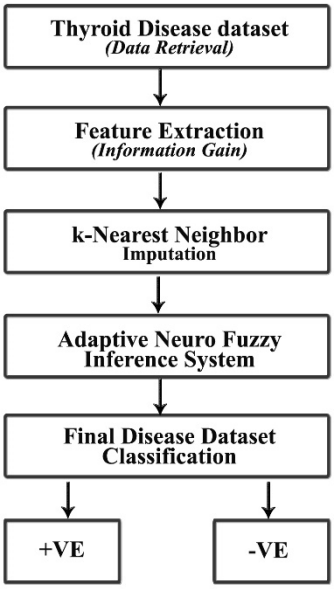

Fig. 1. Block diagram for proposed Hybrid decision support system

1.2. Information Gain

Attribute ranking in a dataset is of great importance on the basis of which a machine can learn about the certain problem to take a decision. The Information gain based on the concept of entropy[16]was implied to approximate the quality of each attribute and select those with high ranking by estimating the difference between post and prior entropy.

The prior entropy of X described by Eq(1), where X and Y are considered discrete variables and E indicates Entropy:

$$E(X) = -\sum_X P(X) \log_2 P(X) \quad (1)$$

Here P(X) represents probability function of X. The conditional entropy of X given by post entropy Y will be as shown in Eqs. (2) and (3):

$$E(X|Y) = -\sum_Y P(Y) E(X|Y) \quad (2)$$

$$= -\sum_Y P(Y) E(X|Y) \log_2 P(X|Y): \quad (3)$$

The Information Gain (I-G) defined in Eqs. (4) and (5):

I-G(X;Y) = Entropy(X) – Entropy (X|Y) (4)

$$\text{I-G}(X;Y) = -\sum_X P(X)\log_2 P(X) - \sum_Y(-P(Y) \times \sum_X P(X|Y)\log_2 P(X|Y)) \quad (5)$$

To calculate information gain and select highest ranking attribute, we used an open source machine learning application Waikato Environment for Knowledge Analysis (WEKA) which is issued under the GNU (General Public License). It is written in java language and contains tools for data pre-processing, classification, regression, clustering, association rules, and visualization.

1.3. Weighed based pre-processing using kNN algorithm

Sometimes classification accuracy is attributed to new values (i.e. in the case of fuzzy logic, member ship values) to the data samples which can give better results [1]. A new value was provided to each data sample for each attribute according to the membership functions. We utilized a k-NN algorithm for the attributed values redetermination of each data sample[17]. The weighting process was made by using the k-NN algorithm in such a manner that all of the first attributevalues werechanged and followed by the k-NN algorithm technique, then the same process was used for the second attribute values of the data samples till n^{th}(last) attribute [12].

Furthermore, to know how to determine an attribute value in a data sample. Suppose *I*be the index of the attribute and *j* represents label of the data sample and we are trying to find a new value for j^{th} data sample's i^{th} value [1]. Indeed, calculate the distances of the same sample data (in this case j^{th} data sample) all other attribute values to this attribute value. The distance measurement was performed using Equation (6):

$$d\big(x_i(j), x_i(m)\big) = |x_i(j) - x_i(m)| \quad (6)$$

Whereas, aj^{th} attribute of the ith data sample is demonstrated by $x_i(j)$ while $x_i(k)$ represents m^{th} attribute of the ith data sample. The next phase is to compute the mean values from the nearest k attribute values which were selected from the calculated distances using equation (7)

$$mean\ value(j) = \frac{1}{k}\sum_{at_n \in at_n, n=1}^{k} at_n \quad (7)$$

For each attribute j
  For each data sample i
    *Calculate all of the other attribute's distances
    Values to the $at_{j,i}$*:*
      For n=1: N-1
        $d(n) = dist_{n \neq j}(at_{j,i}, at_{j,n})$
        End
        *Find values of the nearest k attribute:
          $KN_{1\times k} \leftarrow$ *values of nearest k attribute*
        *Find nearest point's mean value:
          $Mean_{j,i} = mean(KN);$
        *Change the values of $at_{j,i}$:
        $at_{j,i} = mean_{,i,j}$
 next i
next j

Here in the *k* nearest attribute values, the value of the nth attribute indicated by at_n while *k* represents the number of nearest points to the related attribute value *j*. The calculation is used to get the new value, which is the computed mean value of the related attribute values. This new value is considered as the ith data sample j^{th} value. The process repeated for each attribute value of the same data sample in the same way.

1.4. Adaptive Neuro Fuzzy Inference System (ANFIS)

ANFIS (Adaptive Neuro Fuzzy Inference System) is the combination of Neural Network and Fuzzy Inference System, put in the framework of adaptive systems to facilitate learning and adaptation[16, 18]. Least Square Estimate (LSE) with gradient descent method is used by ANFIS to train a hybrid learning algorithm[19]. One cycle of hybrid learning algorithm consists of two passes, forward and backward pass. LSE method is used to identify consequent parameters while a signal travels until layer 4 in forward-pass[19, 20]. Gradient descent then performs updating of premise parameters whereas error propagates backward. In order to achieve the lowest possible error, the same process is repeated again and again [18]. To understand ANFIS architecture, suppose a fuzzy system with two input x and y. The fuzzy system comprises of two Sugeno fuzzy rules:

IF x is A_1 AND y is B_1, THEN $f_1 = p_1x+q_1y+r_1$, (8)
IF x is A_2 AND y is B_2, THEN $f_2 = p_2x+q_2y+r_2$. (9)
In above rules (8) and (9), given inputs are indicated by x and y, Fuzzy sets by A_i and B_i, output specified by fuzzy rules indicated by f_i and design parameters are denoted by p_i, q_i and r_i.

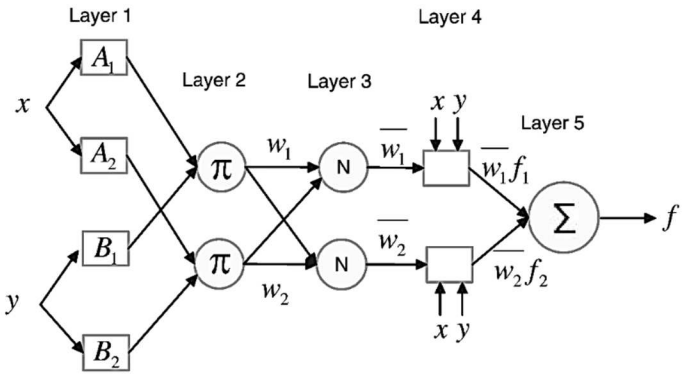

Fig. 2: Adaptive Neuro Fuzzy Inference System Structure

ANFIS structure is shown in Fig.2. There are five layers, each contains a different number of nodes. Nodes in the same layer have same functions.
Each square node i represented by A_i in layer $_{(1)}$ have a node function as eq. (10).

$$o_i^1 = \mu_{A_i}(x) \quad (10)$$

In function (10), x represents input to node$i$. Here o_i^1denotes A_i membership function. It specifies the degree to which x satisfies the A_i quantifier. $\mu_{A_i}(x)$ is a generalized bell-shaped function as defined in expression (11). Here a_i and c_i are premise parameters.

$$\mu_{A_i}(x) = exp\left[-(\frac{x-c_i}{a_i})^2\right] \quad (11)$$

Nodes represented by circles and labeled with "π" in Fig.2 take layer (1)'s outputs as input and multiplies them to produce weight. The output indicates firing strength of the rules.

$$\overline{w}=\mu_{A_i}(x) \times \mu_{B_i}(x), i = 1,2 \quad (12)$$

Circled nodes labeled with "N" calculate implication of each output member function by normalizing weight of a certain node comparing with the weights of other nodes.

$$\overline{w}=\frac{w_i}{\sum_j w_j} i = 1,2. j = 2 \quad (13)$$

This layer is represented by square nodes. Eq. (14) describes how to write a linear format for the output of a rule based on Sugeno inference system. In this equation, r_1 represents bias and p_i and q_i indicates consequent parameters.

$$o_i^4 = \overline{w}_i f_i = \overline{w}_i(p_i x + q_i y + r_i) \quad (14)$$

This is the aggregation layer. It computes the summation of rules and produces a single output.

$$o_i^5 = output = \sum_i \overline{w}_i f_i = \frac{\sum_i w_i f_i}{\sum_i w_i} \quad (15)$$

2. METHODOLOGY

2.1. Dataset

Experiments were performed on the thyroid diseases dataset retrieved from UCI machine learning repository. This specific dataset was used because it is commonly used for other diagnosis systems and we could compare our diagnosis experimental results with previously used systems. GaravanInstitute is the data provider and the documentation for the said dataset was provided by Ross Quinlan. There are 3163 instances for 25 features in the obtained dataset. Each record shows positive/negative result class (attribute), for all of the given features. The dataset with selected attributes was divided into two parts, training and testing.40% of the total patients' data was used for training, while the rest was used for testing of the used diagnosing technique. k-NN algorithm was used for the missing values problem in the database.

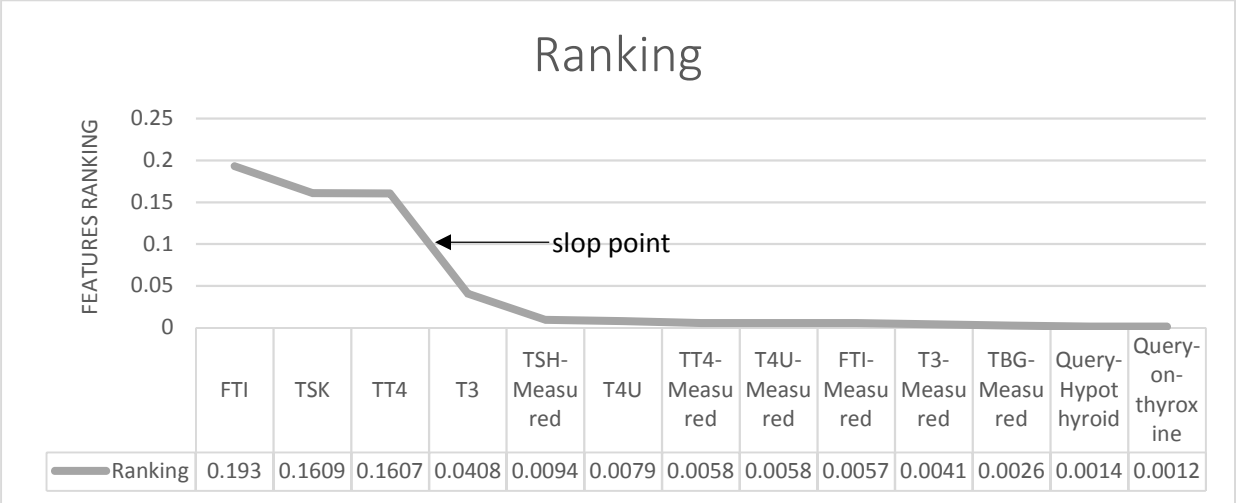

Fig. 3: Dataset features with ranking values

2.2. Experimental Results

We conducted experiments on the thyroid diseases dataset to find out the effectiveness of our proposed approach. The dataset was passed through three stages. Selection of quality attributes is of great importance hence during the first stage of our proposed approach, attributes were reduced to a minimum optimal point to decrease the computation time and increase the accuracy of the system. 3 out of 25 attributes were selected (most of the included features in the dataset were unnecessary and redundant) for the next phase using information gain method which combines *Info Gain Attribute Val* and *Ranker-T-1* algorithms for the purpose of feature extraction. *Info Gain Attribute Val* evaluates the worth of an attribute by measuring the information gain with respect to the class value while *Ranker* ranks the attributes by their individual evaluations[16].A graph for an attribute with features ranking values isshown in Fig.3 where slop point displays a significant change which indicates to select first three attributes only for further manipulation. For attribute selection, we used Waikato Environment for knowledge analysis. Selected features with a respective ranking are shown in thetable.1

Table 1: Selected attributes

S.No	Attributes	Ranking
1	FTI	0.193017
2	TSK	0.160899
3	TT4	0.160707

The dataset is a matrix of 3163×13, where 3163 represents the number of patient's record (rows) while 3 indicates a number of selected features (columns). To prepare data for the last phase, selected attributes were dealt with k based Nearest Neighbor Imputation (kNNI) method to estimate and substitute the missing values. This approach has the ability to predict both discrete and continuous attributes. For the last stage of the proposed system, the dataset was divided into two sets, a training set and testing set, which shared 40% and 60%data of the actual dataset, respectively. During this stage, fuzzy inference system was created by applying Sugeno Fuzzy Inference System to the dataset. Where fuzzy inference system maps attribute to membership function, which further maps it to rules, rules to output membership function, and in last output membership function maps it to single valued output as shown in the Fig.2.

Adaptive Neuro Fuzzy Inference System was provided with 13 inputs (x_1,x_2,x_3) which produced single valued output(z). Eq (16) represents fuzzy if-then rules based Sugeno fuzzy inference model expression for the proposed approach. Where n, nn and o represent linear output parameters.

If

$x_1 M1$ *and* x_2, $L1$ *and* $x_3 K1$

Then

$$f1 = nx_{1+}nnx_{2+}ox_{3+}u \quad (16)$$

To guarantee the results validity, we used k-fold cross validation technique to evaluate the classification accuracy of our diagnosing system, where we set k as 10. In the said technique, the dataset was divided into ten subsets, where 9 out of ten subsets form a training set while remaining one was used as test set. One of the pros of this technique that it guarantees that reliability of the results can be improved and all of the test sets are independent. In last, average error across all ten trails is computed. The classification accuracy for the Information Gain Adaptive Neuro Fuzzy Inference System (IG-kNN-ANFIS) to diagnose thyroid disease was calculated as 99.1%. Which is the highest accuracy ever recorded.

$$\text{Accuracy (A)} = \frac{\sum_{i-1}^{|A|} assess(a_i)}{|A|}, \ a_i \in A \tag{17}$$

$$\text{Assess (a)} = \begin{cases} 1, \ if classify(a) = a.c \\ 0, \ otherwise, \end{cases} \tag{18}$$

In equation (17) and (17), "A" represents test-set of data items to be classified, $a_i \in A$;a . c indicates item "a" class and classification of a_i by ANFIS classifier returns class (a_i).

2.3. Sensitivity and specificity analysis

Proposed system diagnostic performance was evaluated in terms of specificity (true negative rate) and sensitivity (true positive rate) analysis. Here specificity describes the number of patients without disease with negative test results while sensitivity represents the number of patients with disease and have positive test result defined as:

$$Sensitivity\ z = \frac{True\ positive}{True\ positive + False\ negative} (\%) \tag{19}$$

$$Specificity\ z = \frac{True\ negative}{False\ positive + True\ negative} (\%) \tag{20}$$

In equations (19) and (20), thyroid disease correctly and incorrectly classified as normal cases are represented by true positive and false negative. Whereas, correctly and incorrectly classified thyroid disease cases are represented by true negative and false positive.

Table 2: confusion matrix evaluation

Test	Disease present	N	Disease absent	N
Positive	True positive	135	False positive	16
Negative	False negative	14	True negative	2998

Sensitivity for the proposed approach was calculated as 94.77%, while specificity was 99.70%. Table.2 shows obtained values for each variable. Further, 93.24% and 99.72% of positive predictive value and negative predictive values were calculated, respectively. Table.3 shows previously used various methods for diagnosis with used classification method and resultant accuracy.

Table 3: shows previously used diagnosis method

S.No	Author	Method	k-fold cross-valid	Accuracy (%)
1	Serpen et al.[9]	MLP	Test data	36.74
2	Serpen et al.[9]	LVQ	Test data	81.86
3	Serpen et al.[9]	RBF	Test data	72.39
4	Serpen et al.[9]	PPFNN	Test data	78.14
5	Ozyilmaz and yildirim.[10]	MLP with back-prop	3-fold-cross-valid	86.33
6	Ozyilmaz and yildirim.[21]	MLP fast back-prop	3-fold-cross-valid	89.80
7	Pasi[11]	LDA	Test data	81.34
8	Pasi[11]	C4.5-1	Test data	93.26
9	Pasi[11]	C4.5-2	Test data	92.81
10	Pasi[11]	C4.5-3	Test data	92.94
11	Pasi[11]	MLP	Test data	96.24
12	Pasi[11]	DIMLP	Test data	94.86
13	Polat et al.[12]	AIRS	10-fold cross-valid	81.00
14	Polat et al.[1]	AIRS with fuzzy weighted	3-fold cross-valid	85.00
15	Temurtas [13]	MLNN with LM	3-fold cross-valid	92.96
16	Temurtas [13]	PNN	3-fold cross-valid	94.43
17	Temurtas [13]	LVQ	3-fold cross-valid	89.79
18	Esin Dogantekina et al. [14]	GDA-WSVM	Test data	91.86
19	Keles et al. [7]	ESTDD	10-fold cross-valid	95.33
20	Hui-Ling et al [15]	FS-PSO-SVM	10-fold cross-valid	98.59
21	Proposed Approach	InfoGain-ANFIS	10-fold cross-valid	99.13

3. Conclusion and future work

The novelty of our proposed system is that it is a hybrid system, comprised of feature selection process using information gain method which decreases computation time and increases the accuracy of the resulting model, k-NN Imputation for missing data values and ANFIS system, which maximize the generalization capability of our thyroid diagnosis system. Performance comparison of our proposed system to previously introduced methods such as MLP, LVQ, RBF, PPFNN, MLP with back-prop, MLP fast back-prop, LDA, C4.5-1, C4.5-2, C4.5-3, MLP, DIMLP, AIRS AIRS with fuzzy weighted, ESTDD, MLNN with LM, PNN, LVQ, GDA-WSVM, and FS-PSO-SVM[7, 9-13] has been shown in fig.4. Our results prove our proposed diagnosis system has better performance than non-hybrid schemes.

In future, this method can be further improved to reduce the time of computation, increase the accuracy of the system and apply it to more datasets. In addition, a desktop application can be made for easy and efficient thyroid disease diagnosis.

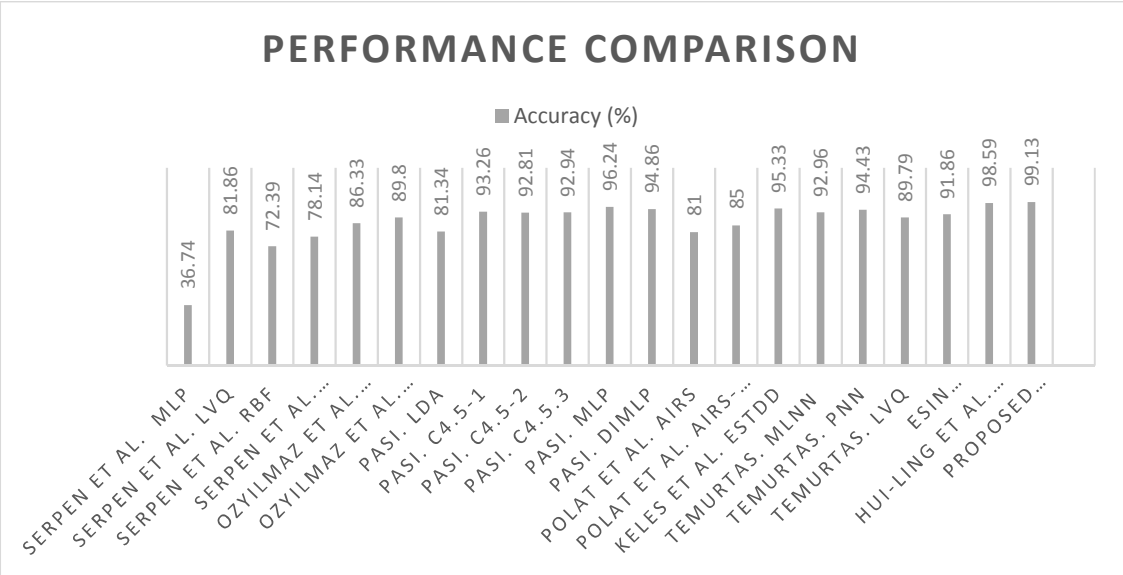

Fig. 4. Performance comparison graph of used method.

4. REFERENCES

1. Polat, K. and S. Güneş, *A hybrid medical decision making system based on principles component analysis, k-NN based weighted pre-processing and adaptive neuro-fuzzy inference system.* Digital Signal Processing, 2006. **16**(6): p. 913-921.
2. Ayaz, A., et al., *Computational Analysis Reveals Three Micro-RNAs in Hepatitis A Virus Genome.* J. Appl. Environ. Biol. Sci, 2014. **4**(8S): p. 34-39.
3. Rull, D.G. *Hypothyroidism*. 07 Sep, 2015 [cited Mar, 2017 12]; Available from: https://patient.info/doctor/hypothyroidism.
4. Khan, S., et al., *A Research on Mobile Applications for Location Tracking through Web Server and Short Messages Services (SMS).* VFAST Transactions on Software Engineering, 2015. **7**(2): p. 12-17.
5. Kenny, D.T. *Overactive Thyroid Gland* Dec, 2015 23 Dec, 2015 [cited Mar, 2017 12]; Available from: https://patient.info/health/overactive-thyroid-gland-hyperthyroidism.
6. Azar, A.T., A.E. Hassanien, and T.-H. Kim, *Expert system based on neural-fuzzy rules for thyroid diseases diagnosis*, in *Computer Applications for Bio-Technology, Multimedia, and Ubiquitous City*. 2012, Springer. p. 94-105.
7. Keleş, A. and A. Keleş, *ESTDD: Expert system for thyroid diseases diagnosis.* Expert Systems with Applications, 2008. **34**(1): p. 242-246.

8. Bilal11, M., et al., *Computational Prediction Of Micro-RNAs In Hepatitis B Virus Genome.* J. Appl. Environ. Biol. Sci, 2014. **4**(8S): p. 106-113.
9. Serpen, G., H. Jiang, and L. Allred. *Performance analysis of probabilistic potential function neural network classifier*. in *Proceedings of artificial neural networks in engineering conference, St. Louis, MO*. 1997. Citeseer.
10. Ozyilmaz, L. and T. Yildirim. *Diagnosis of thyroid disease using artificial neural network methods*. in *Neural Information Processing, 2002. ICONIP'02. Proceedings of the 9th International Conference on*. 2002. IEEE.
11. Pasi, L. *Similarity classifier applied to medical data sets, 2004, 10 sivua, Fuzziness in Finland'04*. in *International conference on soft computing, Helsinki, Finland & Gulf of Finland & Tallinn, Estonia*. 2004.
12. Polat, K., S. Şahan, and S. Güneş, *A novel hybrid method based on artificial immune recognition system (AIRS) with fuzzy weighted pre-processing for thyroid disease diagnosis.* Expert Systems with Applications, 2007. **32**(4): p. 1141-1147.
13. Temurtas, F., *A comparative study on thyroid disease diagnosis using neural networks.* Expert Systems with Applications, 2009. **36**(1): p. 944-949.
14. Dogantekin, E., A. Dogantekin, and D. Avci, *An expert system based on Generalized Discriminant Analysis and Wavelet Support Vector Machine for diagnosis of thyroid diseases.* Expert Systems with Applications, 2011. **38**(1): p. 146-150.
15. Chen, H.-L., et al., *A three-stage expert system based on support vector machines for thyroid disease diagnosis.* Journal of medical systems, 2012. **36**(3): p. 1953-1963.
16. Ashraf, M., K. Le, and X. Huang. *Information gain and adaptive neuro-fuzzy inference system for breast cancer diagnoses*. in *Computer Sciences and Convergence Information Technology (ICCIT), 2010 5th International Conference on*. 2010. IEEE.
17. Shouman, M., T. Turner, and R. Stocker, *Applying k-nearest neighbour in diagnosing heart disease patients.* International Journal of Information and Education Technology, 2012. **2**(3): p. 220.
18. Kalaiselvi, C. and G. Nasira. *A new approach for diagnosis of diabetes and prediction of cancer using ANFIS*. in *Computing and Communication Technologies (WCCCT), 2014 World Congress on*. 2014. IEEE.
19. Jang, J.-S., *ANFIS: adaptive-network-based fuzzy inference system.* IEEE transactions on systems, man, and cybernetics, 1993. **23**(3): p. 665-685.
20. Jang, J.-S. *Input selection for ANFIS learning*. in *Fuzzy Systems, 1996., Proceedings of the Fifth IEEE International Conference on*. 1996. IEEE.
21. Ozyilmaz, L. and T. Yildirim. *Artificial neural networks for diagnosis of hepatitis disease*. in *Neural Networks, 2003. Proceedings of the International Joint Conference on*. 2003. IEEE.