J. Appl. Environ. Biol. Sci., 7(3S)73-82, 2017

ISSN: 2090-4274
Journal of Applied Environmental and Biological Sciences
www.textroad.com

Implementation of Series Motor Four Quadrant DC Chopper for Electric Car and LRT via Simulation Model

S. Arof[1,2], H. Hassan[1], M.R. Ahmad[1], P.A. Mawby[2], H. Arof[3]

[1]Electrical, Electronics and Automation Section, Universiti Kuala Lumpur Malaysian Spanish Institute, 9000 Kulim, Kedah, Malaysia
[2]School of Engineering, University of Warwick, Coventry, CV4 7AL, UK
[3]Department of Electrical Engineering, Faculty of Engineering, University of Malaya, 50603 Kuala Lumpur, Malaysia

Received: February 21, 2017
Accepted: May 14, 2017

ABSTRACT

The widespread use of electric vehicles might mitigate some environmental issues related to global warming, hazardous gas emission and climate changing. At present, EVs which are mostly AC driven, are still not yet affordable by many. DC driven EVs are regarded as a cheaper alternative but more intensive research is required to improve their perfomance. The proposed Four Quadrants DC chopper (FQDC) is an effort to improve the performance of DC drive EVs. In this paper, a simulation model is established to study the characteristics of the new FQDC that drives a Series Motor for Electric Vehicle (EV) application. The simulation model of the proposed Four Quadrants DC chopper and its controller was carried out using MATLAB/Simulink for EV application. The accuracy of the model was verified by real time experiments. Finally, the proposed chopper was simulated to drive an EV and to provide traction for a Rapid KL Star LRT Electrical Train. The simulation results show that the proposed FQDC is capable of performing the respected tasks successfully.

KEYWORDS: DC Drive, Electric Vehicle, Hybrid Electric Vehicle, Series Motor, Four Quadrant DC Chopper.

INTRODUCTION

Using Electric Vehicle (EV) might well be one of the solutions to reduce environmental pollution and global warming. The early DC driven EV prototypes as depicted in Table 1 employed separately excited DC motors as they could provide the various modes of operation needed [1-3], cheaper and longer distance traversed.

Table 1: Production of electric cars [2]

Manufacturer	Renault	Peugeot	Nissan
Model Name	**Clio Electric**	**106 Electric**	**Hypermini**
Driving type	AC Induction	Separately excited	PM Synch
Battery Type	NiCd	NiCD	Li-ion
Max Power O/P(kW)	22	20	24
Voltage (V)	114	120	288
Battery energy capacity (kWh)	11.4	12	-
Top Speed (km/h)	95	90	100
Claimed max range (km)	80	150	115
Charge time(h)	7	7-8	4
Price	$27400	$27000	$36,000

However, separately excited DC motors require two sets of batteries to operate and the batteries cost about 10 to 25% of the total cost of the electric vehicle. A series motor on the other hand is cheaper, lighter, higher starting torque and can operate on a single set of batteries but it tends to overrun when unloaded and loses much speed when loaded [1-3,5]. A recent study undertaken at Oak Ridge National Laboratory [4] reveals that the new generation DC motors are suitable for Electric Vehicle (EV) or Hybrid Electric Vehicle (HEV) applications. Such motors are efficient, smaller, lighter, durable and easier to maintain [4].

DC SERIES MOTOR FOUR QUADRANTS DC CHOPPER

DC series motor has a high starting torque but it loses its speed drastically when loaded. It is common for an electrical motor to lose speed when loaded, but this phenomenon is more noticeable in a series motor [1-3,5]. When driven by the common half-bridge DC chopper, a series motor offers no capability of regenerative braking, field weakening, generator reverse rotation and resistive braking modes.

Corresponding Author: S. Arof, Electrical, Electronics and Automation Section, Universiti Kuala Lumpur Malaysian Spanish Institute, 9000 Kulim, Kedah, Malaysia, E-mail: saharul@unikl.edu.my

As a solution, a new FQDC chopper is proposed as shown in Figure 1 to allow a series motor to drive an electric vehicle. The proposed chopper has seven modes of operations namely drive, field weakening, generator, regenerative braking, resistive braking, parallel and reverse. The new chopper could also reduce the effect of speed drop when loaded by activating the parallel mode [11].

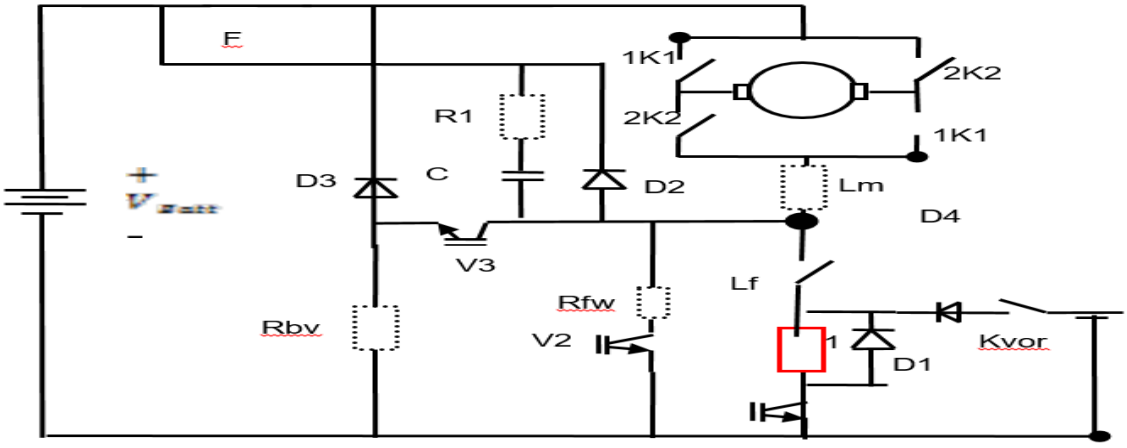

Figure 1: Novel proposed chopper

SIMULATION MODEL OF FOUR QUADRANTS DRIVE DC CHOPPER (FQDC)

Simulation is the safest and economical as first step taken when analysing a new system. The simulation works for EV have covered wide area of research [6-10]. The proposed FQDC chopper can be simulated by a mathematical model using linear differential equations (LDE) or by a programming model using MATLAB Simulink Library components block. In this paper, a simulation model using MATLAB/Simulink Library is developed before the real time implementation. First, the FQDC chopper model is constructed as shown in Figure 2. This is done by arranging the FQDC components according to the original circuit diagram and connecting them. All of the components such as the batteries, resistors, diodes, inductors, IGBTs and contactors must be specified correctly.

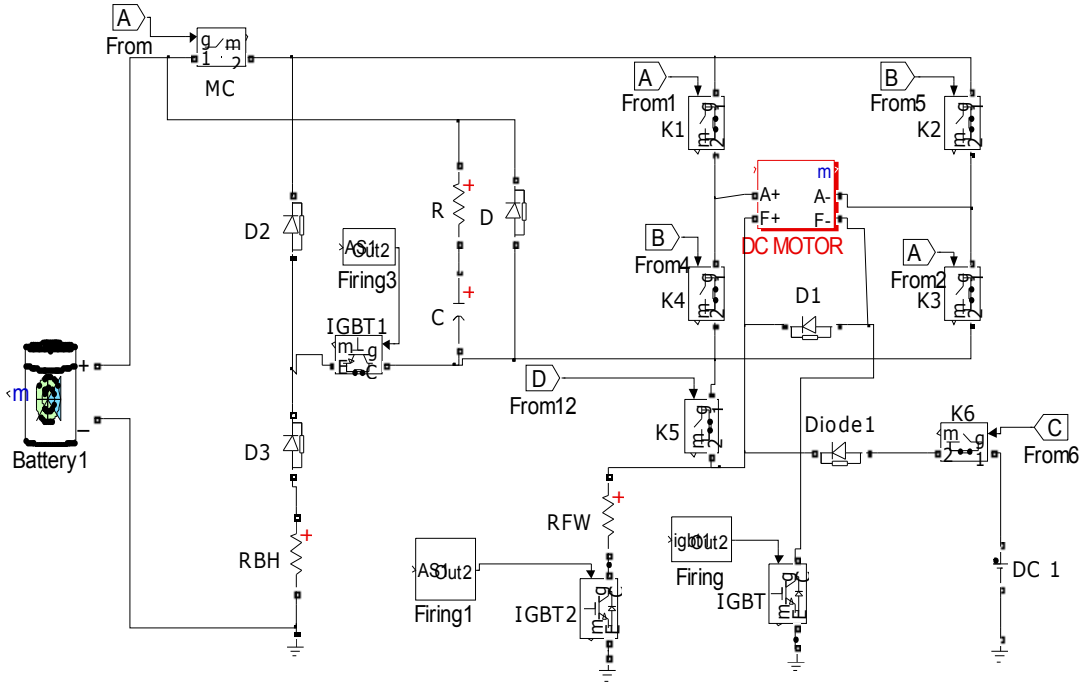

Figure 2: Overall proposed four quadrants DC chopper simulation

Once the FQDC model is completed, it is integrated into the dc series motor simulation model as shown in Figure 3.

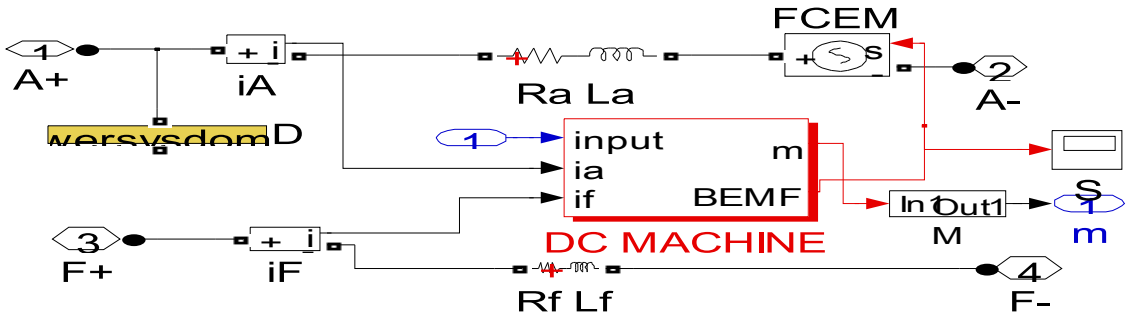

Figure 3: DC series motor model with armature and field winding

SIMULATION MODEL OF FQDC CONTROLLER

FQDC Controllers

The proposed Four Quadrants DC Chopper (FQDC) has seven modes of chopper operations. In real time hardware implementation, the FQDC is designed to have four separate controllers (PIC microcontrollers). Each controller has its own special function and specific operations. The four controllers are data distribution controller, chopper operation controller, subsequent and delay controller and IGBT firing controller. The controllers are shown in Figure 4.

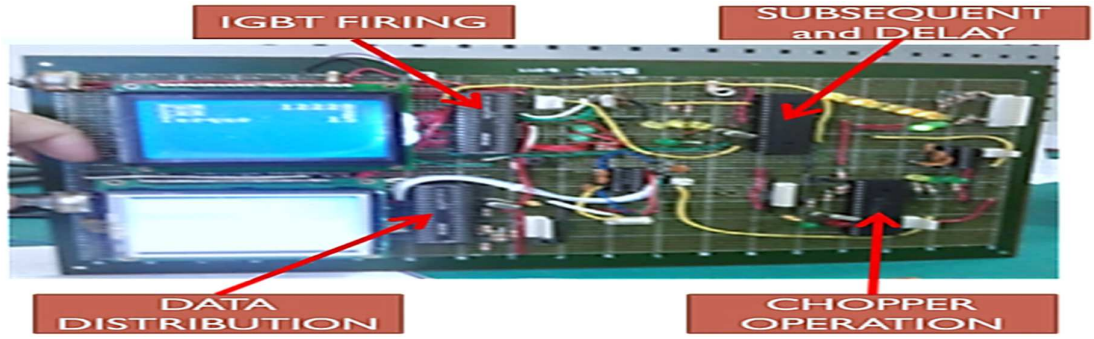

Figure 4: FQDC controller

Data Distribution Controller

The function of this controller is to read the input and output signals and channel the data to the respective controllers as shown in Figure 5. Communication is conducted serially. This controller also enables the MATLAB/Labview software to receive data via comm or USB port so that the data can be collected and processed.

In the hardware application, data is distributed using RS232 and SPI communications. However, in the MATLAB/Simulink model, Multiplexer (MUX), GOTO and FROM functions are used to distribute data.

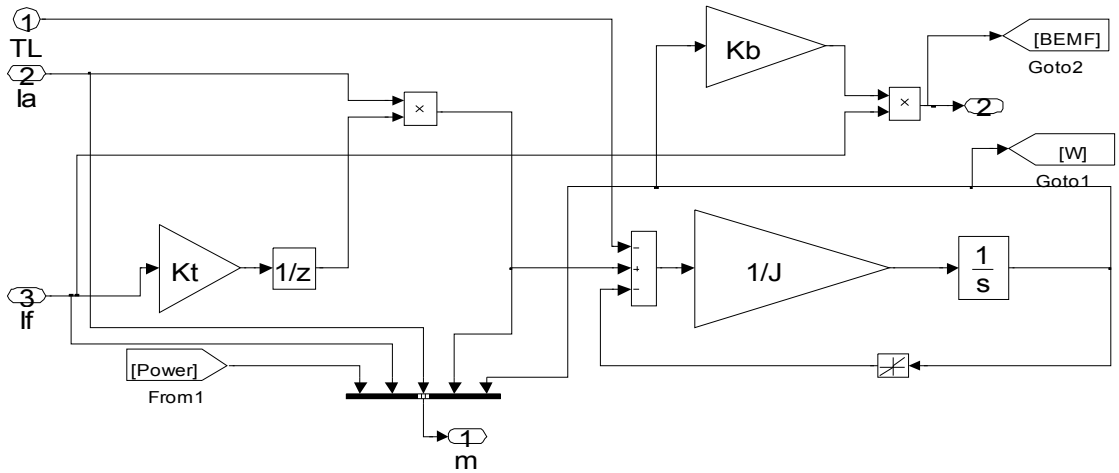

Figure 5: Data is shared and distribute using, GOTO, FROM and MUX in MATLAB/Simulink

Chopper Operation Controller

The main function of the chopper operation controller is to process the input signals and select the best chopper operation mode to engage. The input signals are read from the accelerator pedal, brake pedal, speed, the rate of speed, state of Charge (SOC), error, the rate of error, etc. The simulation model of this controller is shownin Figure 6. Artificial Intelligence control algorithms such as Expert system, Fuzzy Logic, and Self-Tuning Fuzzy Logic [11-13], Neural Network, Adaptive Neuro-Fuzzy Inference System (ANFIS) can be used to handle the chopper operation controller. The easiest way of controlling the chopper operation is by using an Expert System, which utilizes "If then Rules" to make decisions.

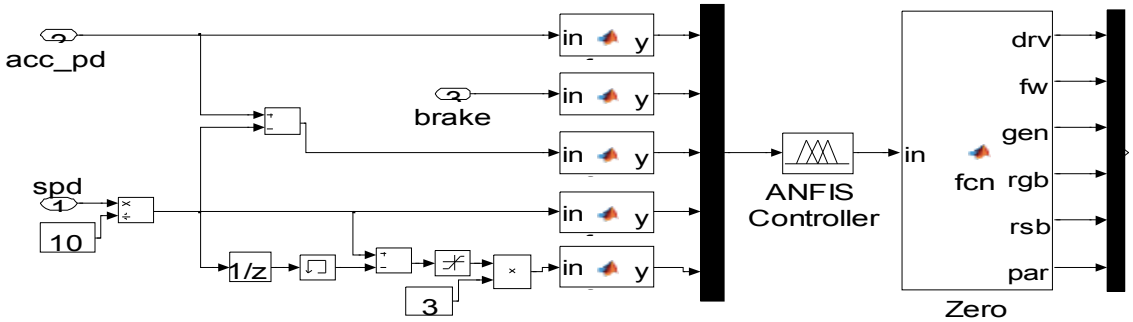

Figure 6: Chopper operation controller with Expert System model representation

Subsequent and Delay Controller

This controller provides delay to make the process realistic and tractable, especially before changing contactors to switch operation mode. If this is not performed, the simulation model will stop abruptly as some parameter values might increase out of bound as a result of contactors opening and closing simultaneously. This error occurs when the values of some quantities (like current or voltage) become as small as zero, due to the ambiguity when the contactors open or close at the same instant. If the parameters happen to be the denominators of fractions, the results of the divisions will shoot to infinity. The subsequent and delay controller is shown in Figure 7.

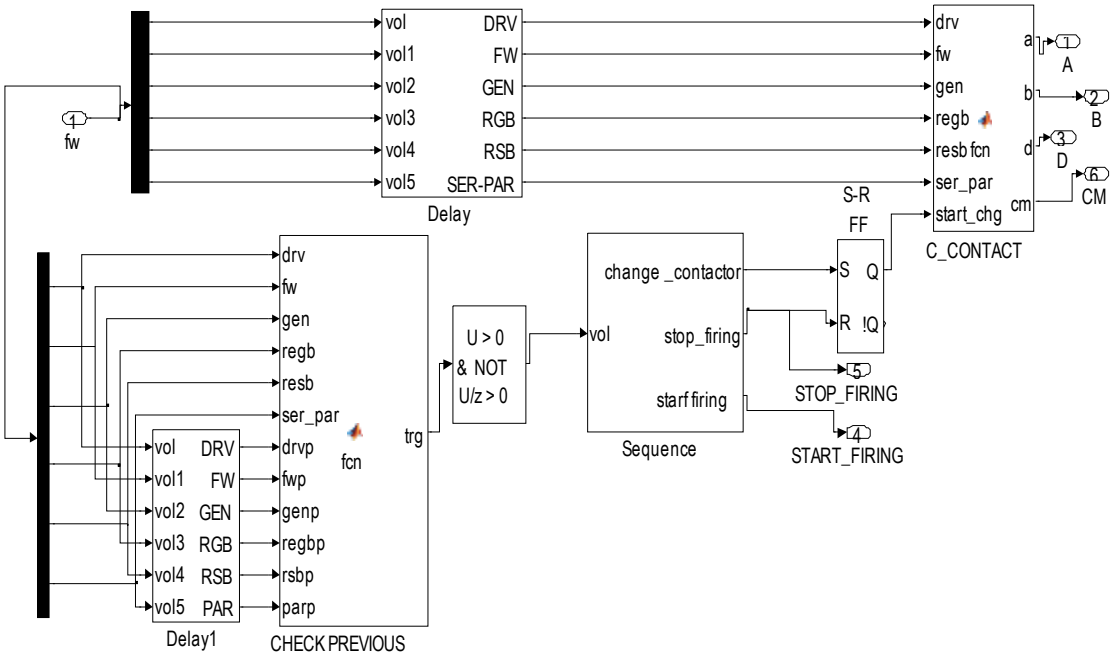

Figure 7: Data shared and distributed using GOTO, FROM and MUX in MATLAB/Simulink

IGBT Firing Controller

IGBT firing controller is the most complex among them. It contains look up tables, cascaded PIDs and the PID controller gain data for each chopper operation. The IGBT firing controller is shown in Figure 8.

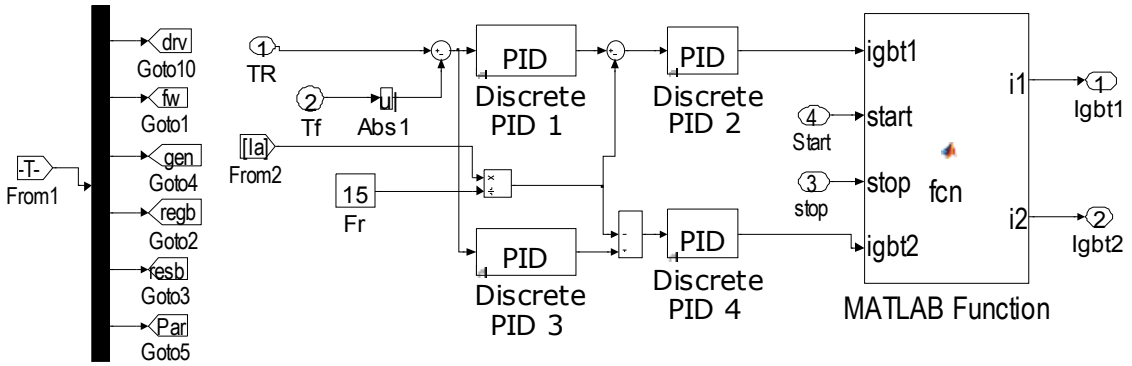

Figure 8: Data shared and distributed using GOTO, FROM and MUX in MATLAB/Simulink

The IGBT gate driver which fires the IGBT is simulated as in Figure 9. The final output will be similar to that of a PWM signal, which turns on and off at a voltage level of 0-15V. The input signal indicated as IGBT1 is connected to the PID block shown in Figure 8.

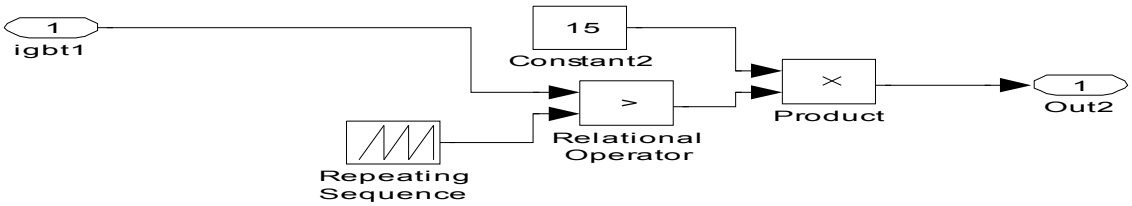

Figure 9: IGBT gate driver model

A complete simulation model of the chopper and controllers is shown in Figure 10.

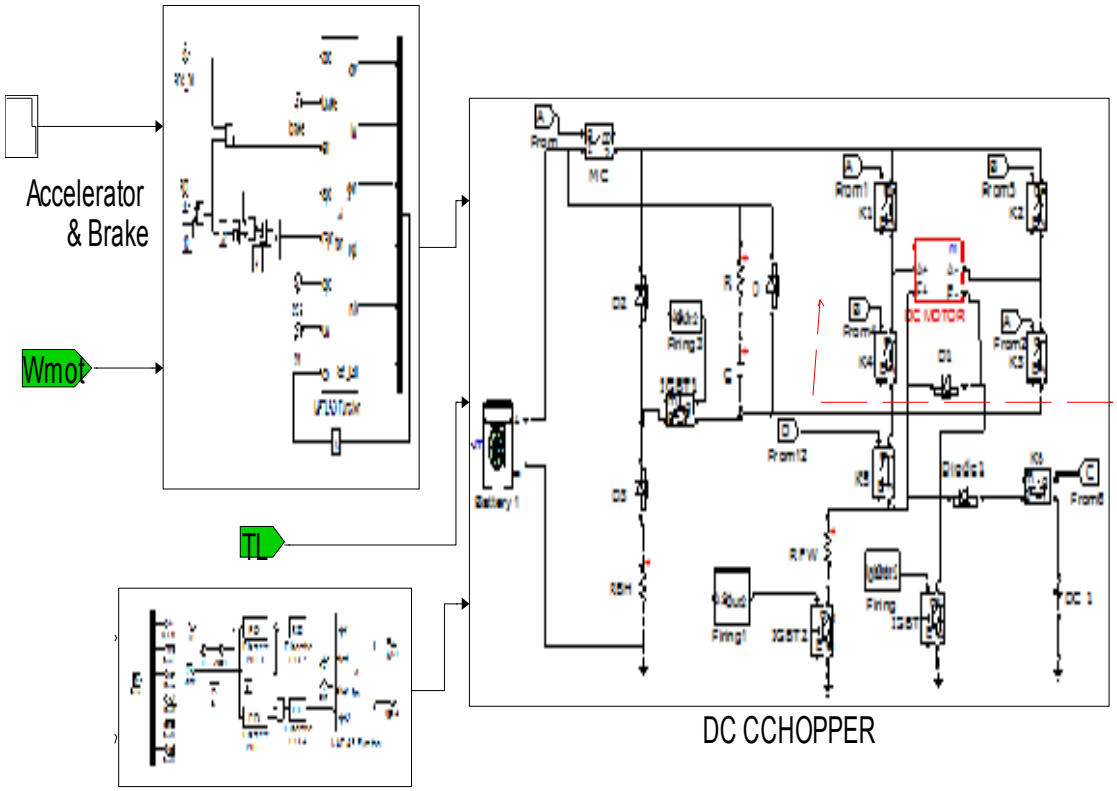

Figure 10: Simulation of FQDC chopper and controller

RESULTS AND DISCUSSION

Experiments

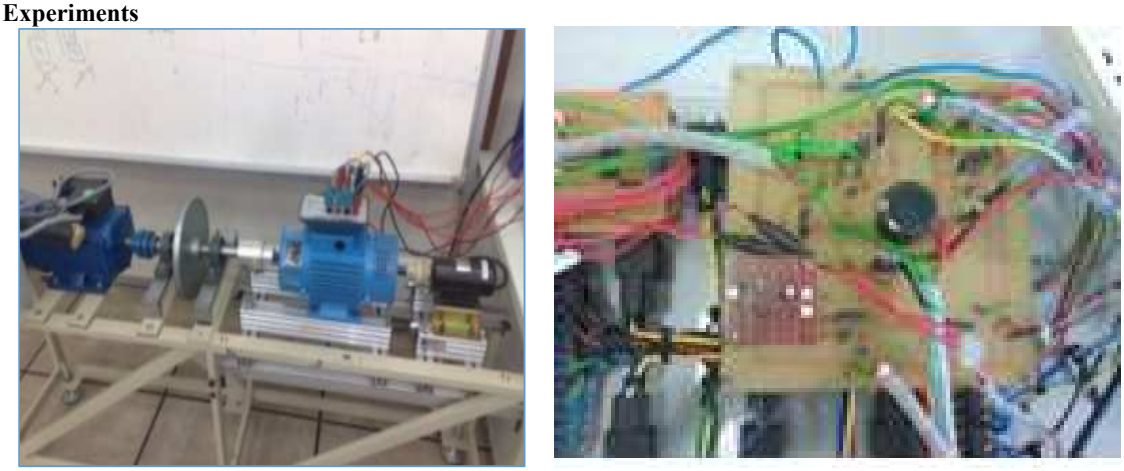

Figure 11: Experimental set-up

A set of experiments was conducted to verify and validate the FQDC simulation model. The experimental setup for the FQDC controller and motor is shown in Figure 11. A 650W DC series motor is used together with an inertia load, and another AC motor is coupled to the DC series motor. The inertia load is to prolong the motor rotation when dc power is removed. The time it takes for the motor to stop rotating is extended when power supply is removed and this is required especially during the regenerative and resistive braking operations. The AC motor is used to provide a counter motor torque to replicate electric car loading action while climbing step hill for parallel mode action. The experiment was conducted to test the FQDC to perform the required chopper operation.

Experimental Result

The experimental and simulation result are plotted together and compared in Figure 14. The results show that the FQDC chopper and controller can perform the six chopper operations as expected. Six modes tested were drive, parallel, generator, field weakening, regenerative braking and resistive braking modes. The chopper operation modes were changed and tested one after another continuously. In drive mode, the motor ran until it reached the base speed. Then, the motor was loaded to represent climbing a steep hill such that its speed dropped due to the load. When parallel mode was activated, a higher speed was retained. When the load effect was removed, the speed increased back. In field weakening mode, the motor speed further increased due to the increase in armature current and torque. In generation mode, the speed decreased slightly due to generator torque effect. During regenerative and resistive mode the motor speed decreased at a faster rate due to the counter torque action. Figure 12 compares the results of simulation and experiments performed for the various modes discussed earlier.

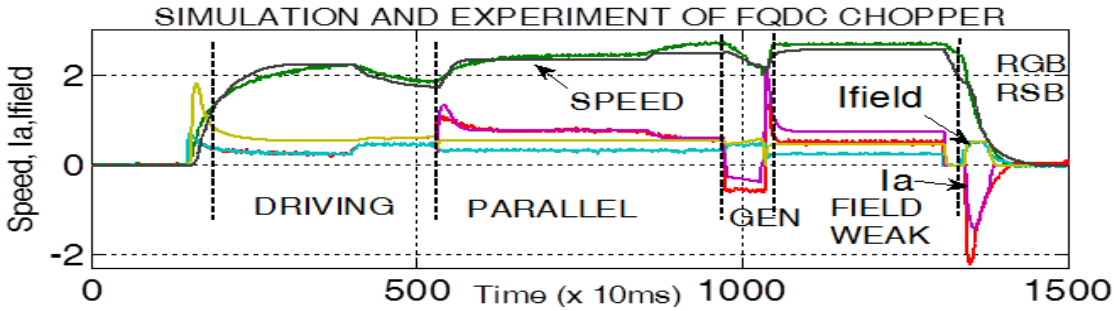

Figure 12: Simulation and experimental result with FQDC and controller

Electrical Vehicle FQDC Test

Once the FQDC simulation model is validated through experiments, it can be used to drive a simulated electric car. For this purpose, a bigger 35kW dc series motor is used with a 200V battery supply. Another simulation model is developed to test the performance of the EV as shown in Figure 13.

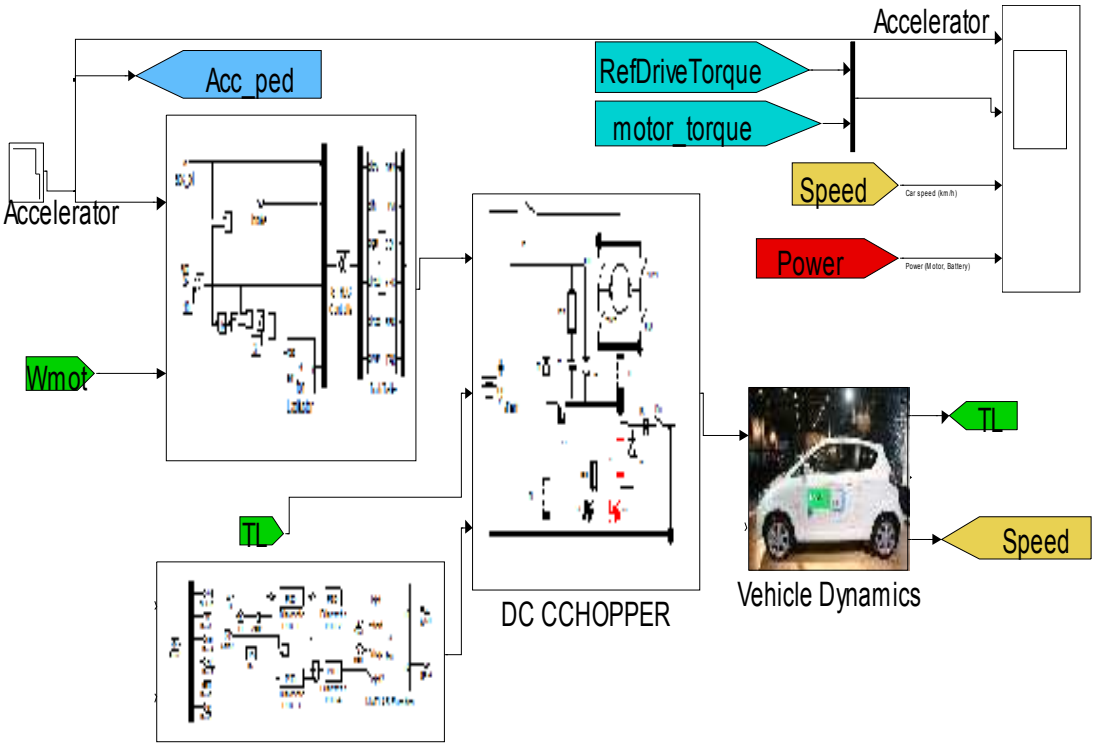

Figure 13: Simulation model for four quadrants drive test

The simulation model was tested to operate the FQDC and its controller in four quadrants drive and the result are shown in Figure 14 and 15. The vehicle's series motor was run until its maximum speed and braked. Then, the vehicle was reversed until it achieved maximum speed and braked. The resulting torque and speedof the vehicle are shown in Figure 15. The motor torque and speed are plotted in the same graph, so that it can be compared and analyzed in the operation of the four quadrants drive.

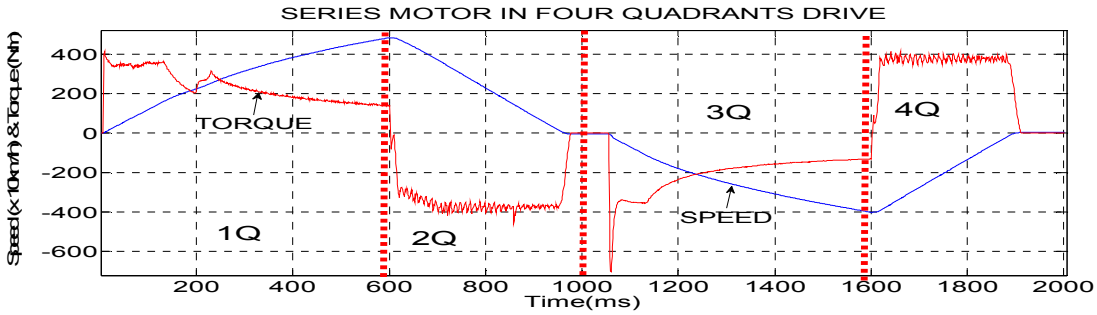

Figure 14: Simulation result with FQDC and controller in four quadrants drive

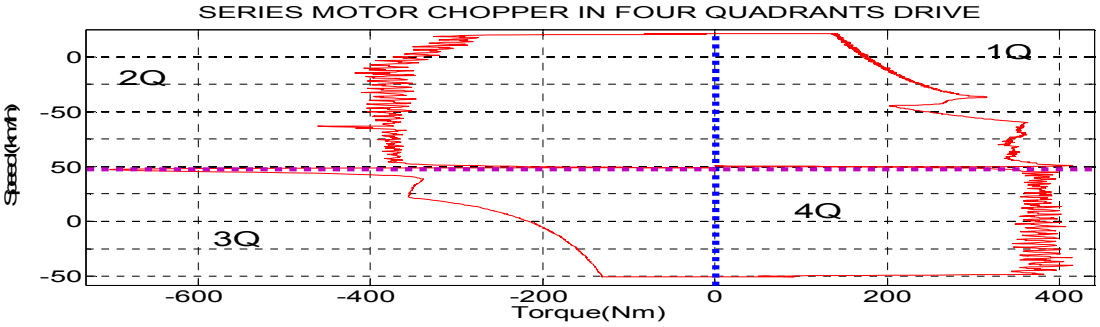

Figure 15: Simulation result of motor torque versus speed in FQDC

FQDC and Controller Tested to Drive Rapid KL Star LRT Train

The possibility of using the proposed FQDC to replace the current FQDC of Rapid KL LRT and its controller was tested. The speed and drive reference signals were captured from the train and are shown in Figure 16. The actual parameters such as train weight, gear ratio, motor resistance, motor inductance,etc. were recorded. Then, a simulation model was established for testing the proposed chopper and controller to drive the electrical train as shown in Figure 17. All the train actual data were loaded into the simulation model.

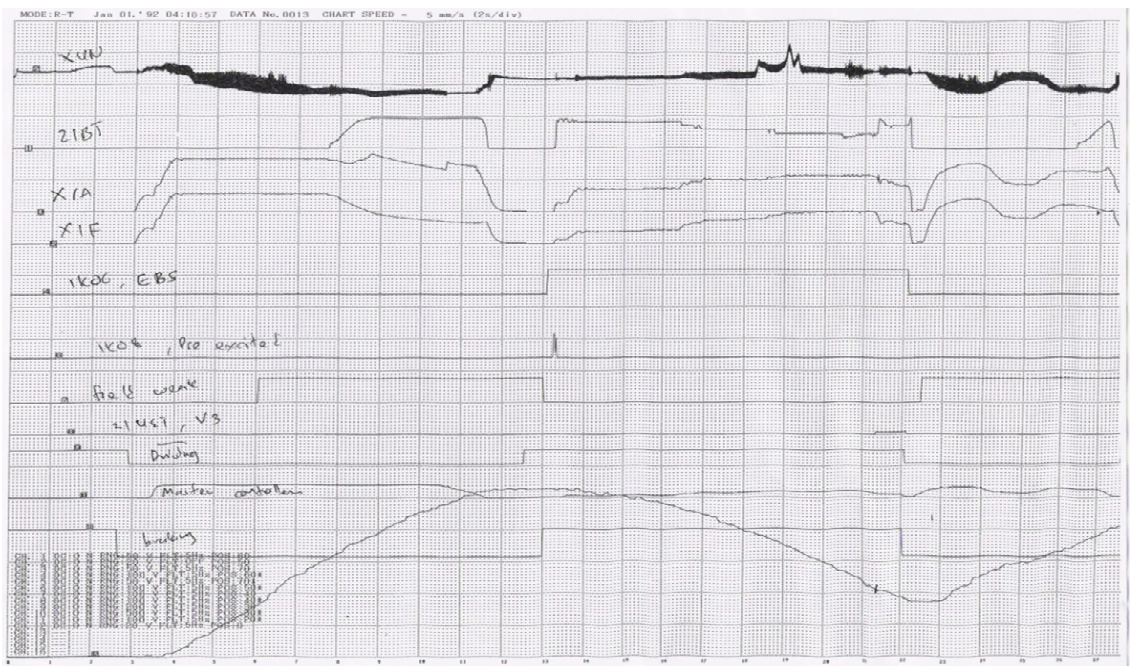

Figure 16: Input reference from actual train

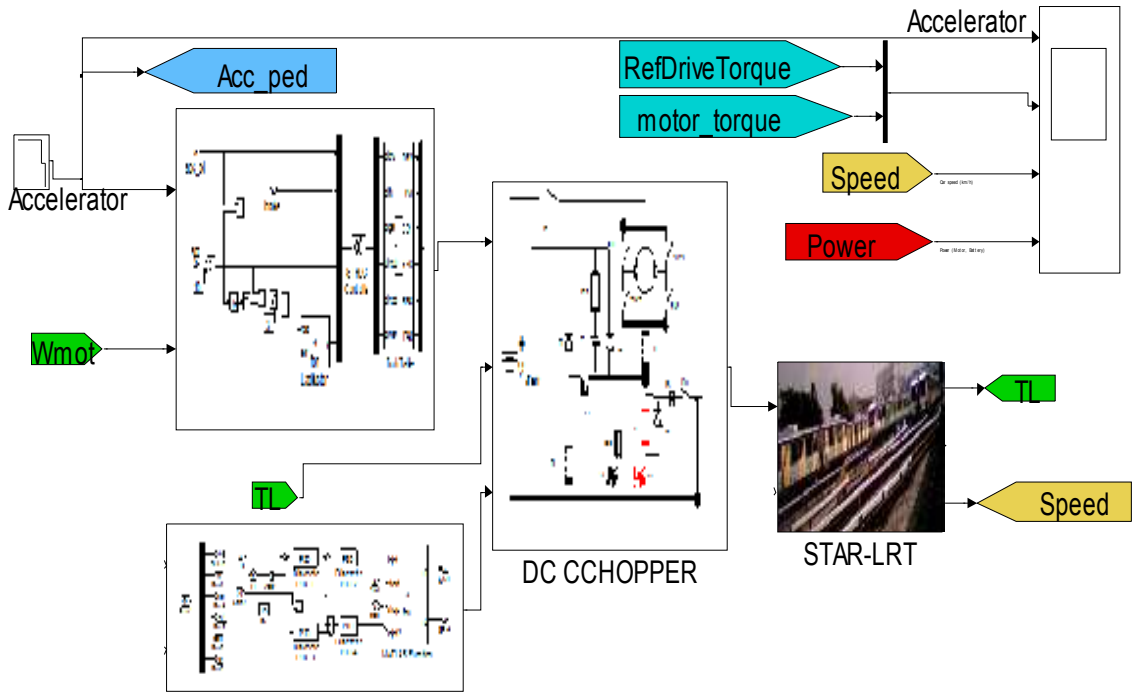

Figure 17: Simulation model of STAR-LRT train

The STAR_LRT speed reference command was used as the reference and simulated with the proposed FQDC. The input reference signals shown in Figure 16 were fed to the simulation model. As illustrated in Figure 18, the proposed chopper produces almost the same speed as the actual speed of the train. From the results it can be inferred that the proposed FQDC could drive the RAPID KL STAR-LRT successfully.

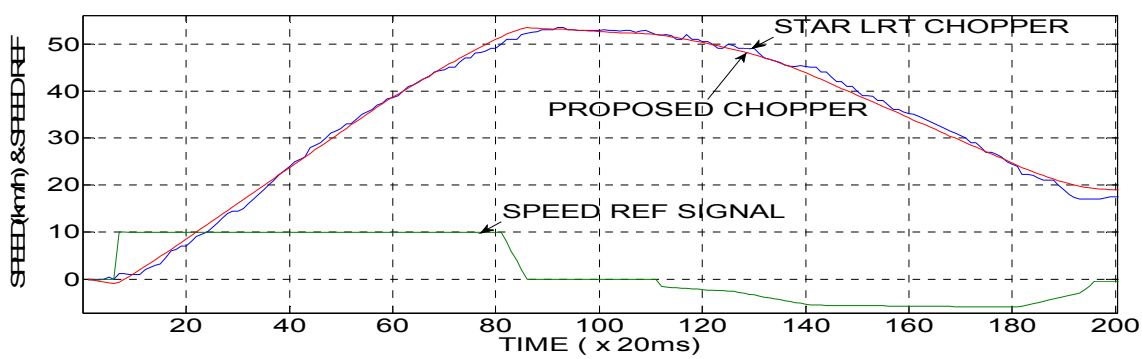

Figure 18: Experimental and simulation result of RAPID KL STAR LRT electrical train

CONCLUSION

From the results, we conclude that the simulation model can simulate the EV and the electric train operation. The proposed FQDC chopper has a high potential to be applied in an EV with a suitable DC series motor due to its simple design, low cost and excellent controllability. It is also applicable to the STAR-LRT system.

ACKNOWLEDGMENT

We would like to thank Rapid KL-Star LRT Management and Engineering Staff for their support in obtaining some information related to the reference signals for the accomplishment of electrical train simulation model

REFERENCES

1. I. Husain, 2011. Electric and hybrid vehicles: Design fundamentals. CRC Press.
2. Michael H. Westbrook, 2001. The electric and hybrid electric vehicle. SAE International and Institution of Electrical Engineers.
3. Muhammad H. Rashid, 2009. Power electronics: Circuits, devices and applications. Pearson Education India.
4. John, H., 2009. Advanced brush technology for DC motors. Retrieved from http://peemrc.ornl.gov/projects/emdc3.jpg.
5. ABB, 2003. Technical guide no. 4: Guide to variable speed drives. https://library.e.abb.com/public/d3c711ec2acddb18c125788f002cf5da/ABB_Technical_guide_No_4_REVC.pdf.
6. Geske, M., P. Komarnicki, M. Stötzer and Z.A. Styczynski, 2010. Modelling and Simulation of Electric Car Penetration in the Distribution Power System-Case Study. In the Proceedings of the 2010 IEEE International Symposium on Modern Electric Power Systems, pp: 1-6.
7. Yin, G., Z. Chengjie and Z.Ning, 2016. The Torque Distribution and Anti-Slip Regulation Control for Two Wheel Independent Drive Electric Vehicle. In the Proceedings of the 2016 28th IEEE Chinese Control and Decision Conference, pp: 4444-4449.
8. Goran, V., Z. Vrhovski and S. Bogdan, 2012. Dynamic Modelling and Simulation of a Three Wheeled Electric Car. In the Proceedings of the 2012 IEEE International Electric Vehicle Conference, pp: 1-8.
9. Cardelli, E. and V.Morettini, 2012. Modelling and Simulation of Retrofitted Electric Car in Urban and Extra Urban Driving Cycles. In the Proceedings of the 2012 IEEE International Energy Conference and Exhibition, pp: 1065-1070.
10. Zuowu, D. and D. Zhao and J. Zuo, 2007. Modelling and Simulation about an Electric Car's Regenerative Braking System. In the Proceedings of the 2007 IEEE International Conference on Mechatronics and Automation,pp: 1705-1709.
11. Arof, S., N.M. Yaakop, J.A. Jalil, P.A. Mawby and H. Arof, 2014. Series Motor Four Quadrants Drive DC Chopper Part 1: Overall. In the Proceedings of the 2014 IEEE International Conference on Power and Energy, pp: 342-347.
12. Arof, S., A.K.M. Khairulzaman, J.A. Jalil, H. Arof and P.A. Mawby, 2015. Self-Tuning Fuzzy Logic Controlling Chopper Operation of Four Quadrants Drive DC Chopper for Low-Cost Electric Vehicle. In the Proceedings of the 2015 6th IEEE International Conference on Intelligent Systems, Modelling and Simulation, pp: 40-45.
13. Arof, S., A.K.M. Khairulzaman, J.A. Jalil, P.A. Mawby and H. Arof, 2015. Artificial Intelligence Controlling Chopper Operation of Four Quadrants Drive DC Chopper for Low Cost Electric Vehicle. International Journal of Simulation, System Science and Technology, 16 (4): 1-10.