*J. Appl. Environ. Biol. Sci.*, 7(6S)1-6, 2017



ISSN: 2090-4274
Journal of Applied Environmental and Biological Sciences
*www.textroad.com*

# Switching Speed Improvements in Multiphase Buck Converter via Two-Shunt Voltage-Sources

**Jabbar A. F. Yahaya, Muhamad Mansor**

College of Engineering, Department of Electrical Power, Universiti Tenaga Nasional, Selangor, Malaysia

*Received: May 19, 2017*
*Accepted: July 18, 2017*

## ABSTRACT

Multiphase Buck converters are well known for their smaller ripple current, smaller filter design and smaller component ratings. The converter operating responses however depend on the value of inductor and load resistance. Increasing the switching frequency can improve the transient responses. However, it reduces the system efficiency and controlling the current response can be complex. This paper proposes an improved multiphase buck converter for a lithium-ion battery charging applications. The proposed system is based on the 'Bi-level drives' concept, which requires two input voltage in which one is higher than the other input and is connected in series to the system. By driving the load with a higher input voltage, the transient response is observed to be much faster. Upon reaching the desired reference output, the system will revert to a lower input voltage, thus, the efficiency of the system will not be affected. This scheme requires additional two power switches and a power diode. The operation and the switching scheme will be discussed in this paper.

**KEYWORDS:** Multiphase DC-DC Converter, Buck Converter, Transient Responses.

## INTRODUCTION

Today, Lithium-ion batteries are intensively used in portable devices, telecommunication base stations and DC motor applications. These batteries have many advantages such as fast charging capabilities, higher energy density, low self-discharging and small in size/weight [1]. As a result, these batteries are used as energy storage devices for renewable energy sources which provide flexibility for the system to operate during off-peak periods. For a DC-powered application, a multiphase step-down converter offers many advantages under interleaved operation [2]. Addition, it's parallel connected topology allows the use of smaller rated devices for high-current applications, allowing space reduction in thermal managing.

One of the main characteristics that must be considered when designing a converter for lithium-ion based is the characteristic curve. The characteristics curve depends very much on the charge/discharge rate which makes it unique to the type of applications. Stringent standards must be followed according to the nominal characteristic curve to ensure safety use and prolong the battery life.

A voltage dip occurs when a high current demand is suddenly required at the load. As this event occurs during large load changes, the battery must provide the necessary current which in return temporarily drains the battery voltage [3]. This effect however should be avoided as draining too much of the battery voltage will damage the battery. Due to the sizing of components to reduce power consumption, the passive components (inductors, capacitors) are unable to change rapidly at the speed of load current. To protect the battery from excessive voltage dips, most lithium-ion based converter is designed with a low-voltage cutoff (LVC) circuitry. As the LVC circuit instantly removes the battery from the system, premature voltage cutoff will constantly occur for a dynamic current application decreasing the system's reliability. Another approach was to design a converter with fast transient response to reduce the effect of transient voltage dip [3]. Thus, up to now, many optimized compensator or control methods have been presented in the literature [4-5].

In order to improve the transient response of a multiphase buck converter. Two-shunt voltage-sources based on bi-level drives concept is proposed in this paper [6-9]. Two input voltages in which one is higher than the other input and is connected in series to the system. By driving the load with a higher input voltage, the output current ramps up much faster before swapping over to a lower input voltage once the output current reaches the desired value. Likewise, the output current is able to drop faster by switching to the higher input voltage in which current is allowed to flow in opposite direction to the load current. This scheme requires additional two power switches and a power diode.

**Corresponding Author:** Jabbar A. F. Yahaya, Faculty of Engineering, Universiti Tenaga Nasional, Kajang, Selangor, Malaysia, E-mail: j.alfattah@gmail.com

## LITERATURE REVIEW

### Adaptive Voltage Positioning (AVP)

Ongoing research that improves the dynamic response of the DC-DC converter whilereducing the size of the output capacitor by means of either improving the controllerschemes [10-11] or by introducing an additional energy path (AEP) to compensatethe charge perturbation in the output capacitor is needed. The reduction ofoutput capacitor leads to a lower cost and longer lifetime of the equipment.A technique is known as Adaptive Voltage Positioning (AVP) is often used toreduce the amount of bulk capacitance required to maintain the output voltage withinits regulation limits during load transients. This approach positions the output voltageat a higher level under a light load and decreases it under a heavy load. The effect isto pre-charge the capacitors in anticipation of a load transient. The output voltage, therefore, varies with load current and increases the effective impedance of theconverter. Figure 1 shows the block diagram of the AVP control scheme [12]. The phaseinductor is measured and forwarded into the $R_{il}$, which produced a signalproportional to the voltage error output. The voltage error is then compared with thereference $V_{ref}$ and fed into the non-inverting terminal of the error amplifier EA. Ifthere is any change in the voltage error signal, the error amplifier will increase anddecrease accordingly to the duty cycle to shift the output voltage to the desired value.The output voltage that is forwarded into $Z_2$ block and into the inverting terminal willinform the error amplifier $E_A$ whether the level of voltage positions is sufficient.

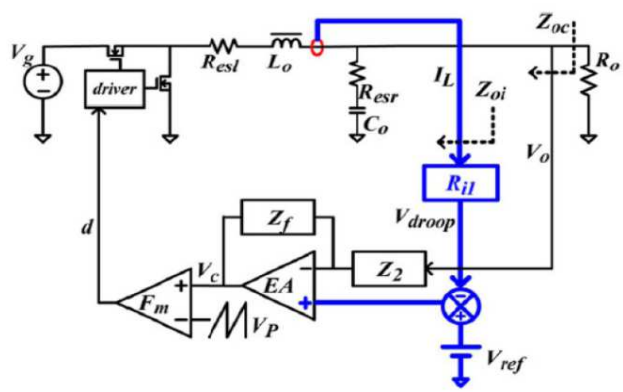


**Figure 1: Converter with AVP technique [12]**

## METHODOLOGY

Figure 2 shows the proposed structure of a multiphase buck converter. As shown in Figure 2, the proposed converter consists of one additional DC voltage source $Vs_{(high)}$, two power switches ($S_1$, $S_2$), and two power diode ($D_1$, $D_2$). The rest of the components are similar to the conventional multiphase converter. The switching states for the proposed converter are shown in Table 1, where the total input source can be either 0, $Vs_{(high)}$ + $Vs_{(low)}$ or $Vs_{(low)}$.

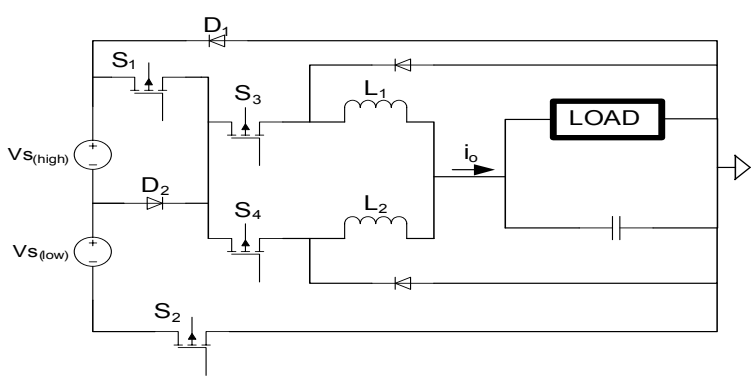


**Figure 2: Modified multiphase buck converter with two-shunt voltage-sources**

The normal operation of the converter runs with $Vs_{(low)}$ at state 3 where only $S_2$ is turned on. The switches $S_3$ and $S_4$ runs on a pulse-width modulation (PWM) control to obtain the required output reference. The speed of the transient response depends on the on-time sequence generated by the PWM control and is controlled by the compensator. Apparently, by designing a very fast compensator, the transient response is likely to improve as well. However, this is not entirely the case where eventually, the transient response also depends on the hardware responses. Designing a higher switching frequency converter may improve the hardware responses, but at the expense of higher switching losses.

**Table 1: Switching transition for proposed method**

| State | Total Input Voltage | $S_1$ | $S_2$ |
|---|---|---|---|
| **1** | 0 | on | off |
| **2** | $Vs_{(high)} + Vs_{(low)}$ | on | on |
| **3** | $Vs_{(low)}$ | off | on |
| **4** | 0 | off | off |
| **5** | 0 | on | off |

Figure 3 shows the output waveform comparison between the conventional and proposed method. Suppose the multiphase converter runs on $Vs_{(low)}$ = 100V, Load = 34.5Ω and inductor = 0.6mH. The system time constant would be 17.4us with a peak output current 2.9A. By taking into account that it would reach 2.9A after three-time constant, the total time would be 52us. Hence, by using the above-stated parameters, a conventional multiphase converter would have an inductor current with a rate of 56000A/s. If the load suddenly requires a 10A output, it would take around 0.18ms to respond.

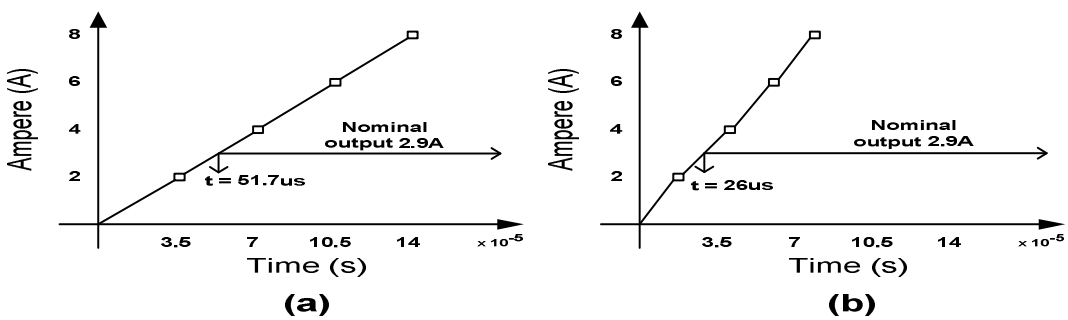


**Figure 3: Comparison of output current vs time: (a) Conventional (b) Proposed method**

Now with the proposed converter shown in Figure 2, if a 10A output is required, the controller will be prompt to change into state 2 which turns on both $S_1$ and $S_2$. If both $Vs_{(high)}$ and $Vs_{(low)}$ are of the same value, the input will now be 200V. The converter will still have the same time constant (17.4us). however, there is a significant change at the inductor current which is now 111500A/s. The proposed converter will only take 0.09ms to reached 10A, which is one time faster compared to the conventional method. Once the new output reference is reached, the converter will revert back into state 3 and resume the normal operating conditions.

The control configuration is shown in Figure 4, where $I_{ref}$ represents the desired output current, controller 1 and controller 2 as the outer and inner loop control respectively. Each power switch $S_3$, $S_4$ will have its own switching modulation and interleaved by 90 degrees to ensure optimum ripple cancelation. To control the triggering state during high load changes, a mono-stable flip-flop with edge detection is connected to the output current sensor. Once triggered, the controller will hold the turn-on state of switch $S_1$ within the required time duration.

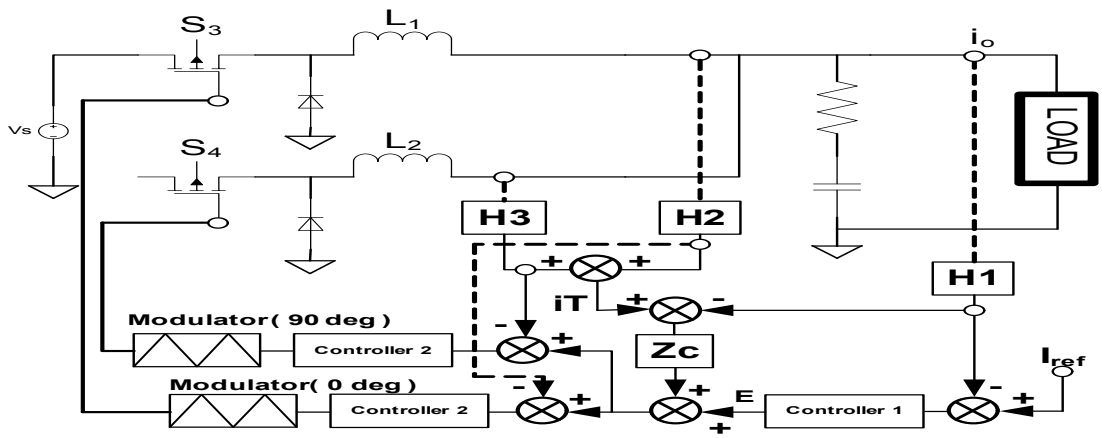


**Figure 4: Control configuration for the multiphase converter**

## RESULTS AND DISCUSSION

In order to evaluate the performance of the proposed converter during load changes, the experimental results were conducted under MATLAB/Simulink platform. Table 2 shows the parameter used for the proposed converter.

**Table 2: The converter specification**

| Four-Phase Buck Converter | |
|---|---|
| **$Vs_{(low)}$, $Vs_{(High)}$** | 10V, 10V |
| **Switching Freq. (Fs)** | 7kHz |
| **Output Capacitor (C)** | 5uF |
| **Inductor per Phase (L)** | 0.6mH |
| **Internal Resistance (Ro)** | 0.016Ω |
| **Inductor Loss (Ω)** | $R_{L1} = 0.1$, $R_{L2} = 0.12$<br>$R_{L3} = 0.13$, $R_{L4} = 0.14$ |

For the first experiment, the transient response of both systems was tested under step load changes from 0.5A to 2A. Figure5 shows the output waveform between the proposed and conventional method. Initially, the system was running at 0.5A with balanced inductor currents ($i_{L1}$, $i_{L2}$, $i_{L3}$, $i_{L4}$) for both systems. During a step change of 2A, the proposed converter responded almost instantaneously within 0.02ms until reaching steady state. The inductor current within this transition was observed to be balanced. As seen in Figure5(b), the conventional topology requires 0.12ms to reached 2A. During the transient response, it was seen that inductor current $i_{L1}$ was carrying the highest current for about 0.05ms.

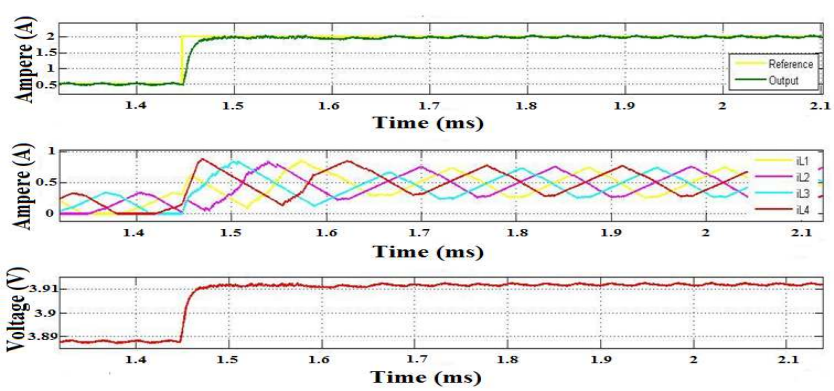


**(a)**

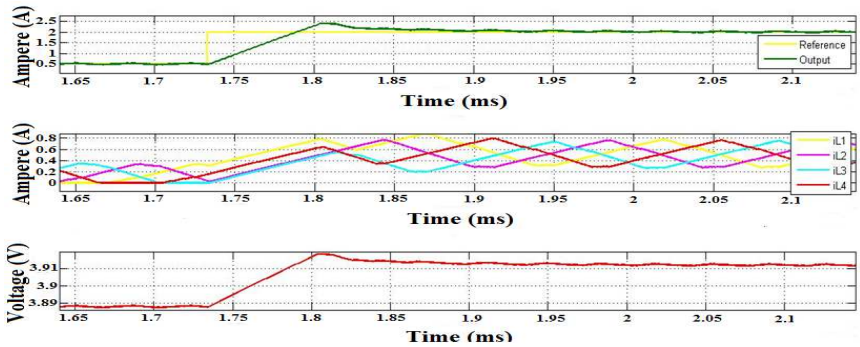


**(b)**

**Figure 5: Output transition from 0.5-2A: (a) Proposed-0.02ms (b) Conventional-0.22ms**

To ensure consistency results, another step load change was conducted as the second case. This time, a step load changes from 2A to 5A was conducted. In this experiment, the proposed converter was able to obtain a 0.022ms response time and the inductor current was seen to be balanced. As expected for the conventional method seen in Figure6(b), a transient respond of 0.32ms was recorded. However, for the highest current carrying state during a transient response, $i_{L4}$ was recorded this time with the duration of 0.2ms. By comparing all the figures, it is clear that the proposed converter possess a much faster response as compared to the conventional topology for wide ranges of output current. The results of all the cases are consistent and proven to be valid.

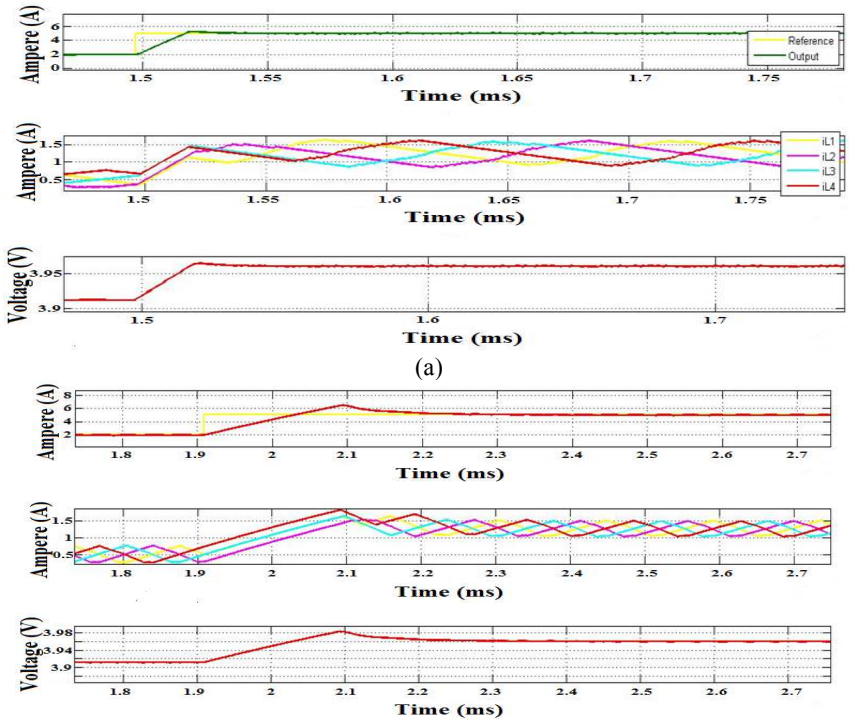


(a)

(b)

**Figure 6: Output transition from 2-5A: (a) Proposed-0.022ms (b) Conventional-0.32ms**

## CONCLUSION AND RECOMMENDATIONS

In this paper, a new topology for a multiphase buck converter is proposed. Conventional multiphase topology depends on the time constant of components (L and R) which limit the speed of transient response. Therefore, an additional DC voltage sources $Vs_{(high)}$, two power switches and two power diodes are added to the converter to improve the speed of transient responses. In order to trigger the switching states during transient responses, a mono-stable flip-flop with edge detection is connected to the output current sensor. The controller

will determine the switching duration according to the output requirements before reverting back to the normal operation. Two comparisons are done between the conventional and proposed topology. From the comparisons, the proposed converter possess a much faster transient response and is able to reduce the current stress on each phase inductors due to the steep load changes. A distinctive attribute of the proposed converter, the transient responses improves at higher input voltages. For low power operating system, a higher switching frequency is normally applied to obtain a fast transient response. This is not the case for high power systems, where the power switches have limited switching capability. Thus, the proposed converter can be used in high power application to ensure good performance with improved efficiency.

## ACKNOWLEDGEMENT

This research was supported by Fundamental Research Grant (FRGS) and Ministry of Higher Education, Malaysia. We also thank our colleagues from Centre of Electrical Transportation system (CETS-Universiti Tenaga Nasional) who provided insight and expertise that greatly assisted the research.

## REFERENCES

1. Liu, Y.H., J.C. Li and J.H. Teng, 2004. An FPGA-Based Lithium-Ion Battery Charger System. IEEE Region 10 Conference, pp: 435-438.
2. Beccuti, A.G., M. Kvasnica, G. Papafotiou and M. Morari, 2013. A Decentralized Explicit Predictive Control Paradigm for Parallelized DC-DC Circuits. IEEE Transactions On Control Systems Technology, 21 (1): 136-148.
3. National Instruments, 2013.NI PXIe-4154 Theory of Operation. Retrieved from http://zone.ni.com/reference/en-XX/help/370736L-01/ni_dc_power_supplies_help/4154_theory/.
4. Lei, W.H. and T.K. Man, 2011. A general approach for optimizing dynamic response for buck converter. ON Semiconductor.
5. Chen, J.J., M.X. Lu, T.H. Wu and Y.S. Hwang, 2013. Sub-1-V Fast-Response Hysteresis-Controlled CMOS Buck Converter Using Adaptive Ramp Techniques. IEEE Transaction on VLSI, 21 (9):1608-1618.
6. T. Wildi, 2006. Electrical machines, drives, and power systems. Pearson Prentice Hall.
7. Kenshi,S., 2016. Stepping motor operation and theory. Retrieved from www.shinano.com/stepping-motor-operation-theory-pg4.php.
8. Wendt, M., L. Thoma, B. Wicht and D.S. Landsiedel, 2008. A Configurable High-Side/Low-Side Driver With Fast and Equalized Switching Delay. IEEE Journal of Solid-State Circuits, 43 (7):1617-1625.
9. Chen, W.W., J.F. Chen and T.J. Liang, 2013. Improved Transient Response Using High-Frequency Feedback Control Circuit of the Constant Current Ripple Constant on-Time With Native Adaptive Voltage Positioning Design for Voltage Regulators. IET Power Electronics, 6 (9):1948-1955.
10. Lee, M., D. Chen and K. Huang, 2008. Modeling and Design for a Novel Adaptive Voltage Positioning (AVP) Scheme for Multiphase VRMs. IEEE Transaction on Power Electronics, 23 (4):1733-1742.
11. Zhang, K., S. Luo and T.X. Wu, 2013. New Insights on Dynamic Voltage Scaling of Multiphase Synchronous Buck Converter: A Comprehensive Design Consideration. IEEE Transaction on Power Electronics, 29(4):1927-1940.
12. Kajiwara, K., F. Kurokawa and H. Maruta, 2015. Digital Peak Current Mode DC-DC Converter for Data Center in HVDC System. IEEE International Telecommunications Energy Conference, pp: 1-6.