J. Basic. Appl. Sci. Res., 3(3)650-657, 2013

ISSN 2090-4304
Journal of Basic and Applied Scientific Research
www.textroad.com

Energy and Economy Saving in a Low Density Polyethylene Plant Using Pinch Technology

Jamshid Khorshidi*, Mohammad Darvishi

Hormozgan University, Bandarabbas, Iran

ABSTRACT

This work aims to study the heat exchanger network of low density polyethylene plant of Aryasasol polymer complex in South Pars, south of Iran. In existing heat exchanger network, large amount of energy is supplied from utilities for heating and cooling of streams. After targeting the heat exchanger network by pinch technology, we realized that more amount of energy can be recovered between cold and hot process streams. The physical and chemical properties of streams were assumed to be constant along the process, and heat transfer coefficients of them were obtained by correlations.

The best minimum temperature difference (optimal ΔT_{min}) was found by trade-off in energy and capital costs. For this ΔT_{min}, the network is called threshold problem, because it needs only cold utility. A new design for the process based on pinch technology was accomplished and represented, and the outcomes were compared to existing plant.

The comparison of optimum design using pinch technology with existing plant shows a saving of 43.8% (about 422,000 $/year) in energy cost and 18.4% (about 269,000 $/year) in total annualized cost, but the capital cost is increased about 30.9%, 154,000 $/year, compared to existing network.

KEYWORDS: pinch technology, energy recovery, heat exchanger network, minimum temperature difference (ΔT_{min}), low density polyethylene plant process.

1. INTRODUCTION

In the last four decades, efforts have been intensified in the fields of energy saving and recovery due to increasing of energy cost and shortage of energy resources as well as global concerns about world pollution. A heat recovery system consists of a set of heat exchangers that can be treated as a heat exchanger network (HEN), and is used in the process industries such as gas refinery and petrochemical industry, to exchange heat energy among several process streams [1].

Heat exchanger network synthesis is used to design an optimum HEN for the process plant, where total annualized cost has its minimum value. Because of its significant advantages in saving energy and costs, HEN synthesis has been considered one of the most important research subjects in process engineering [1].

The two important methods used in HEN synthesis are mathematical programming methods and thermodynamic-based methods. The pinch design method is the most complete thermodynamic method used to design the optimum HEN. The method of pinch technology introduced by Linnhoff is derived through thermodynamic laws. Fundamentals, Applications and benefits of pinch method are introduced in Linnhoff et al. [1, 2].

The application of this method makes it possible to gain a basic insight into the thermal interactions between a chemical processes and utility systems. This means that a certain reconstruction and financial investment in an existing process can considerably reduce capital and energy consumption. Pinch technology enables to design the HEN and utilities, being based on the design of the reaction, separation and recovery sections, for which the mass and energy balances of the plant were established. In the design of the HEN, the pinch technology leads toward obtain the minimum values for several parameters of the process such as utilities types and levels, minimum number of heat exchange units and their areas, and operating and capital costs. These minimum values can be obtained without considering a detailed design of the HEN or the exchangers that form it. It is only necessary to have the thermal data of the process streams [3].

2. Process description

The target process is Clean Tubular Reactor (CTR) technology for the low density polyethylene (LDPE) plant in Aryasasol polymer complex in Asalouyeh, south of Iran, with a capacity of 300,000 ton/year based on 8000 operating hours per year producing various LDPE grades. LDPE is an important raw material producing film, bag,

***Corresponding Authors:** Jamshid Khorshidi, Hormozgan University, Bandarabbas, Iran.
Email jkhorshidi@yahoo.com

dishes, cable cover and parts, etc. Figure 1 shows a simplified process flow diagram of the LDPE production process.

The important raw material of the process is ethylene (C_2H_4), which is produced in olefin plant of the complex. At primary compression, the pressure of fresh ethylene and low pressure recycle gas is increased from about 2 to 250 bar absolute. Together with feed gas, propylene or propane enters the system as a chain transfer agent (CTA). The amount of CTA depends on the product type. The melt flow index (MFI) is maintained at recipe value by the propylene or propane flow control. The discharge gas from primary compressor is combined with high- pressure recycle gas from the reactor. The combined gas is compressed in the secondary compressor up to the reactor pressure.

The polymerization is carried out in a tubular reactor consisting of a pre-heater and four polymerization sections. The discharged compressed gas from secondary compressor is fed to the pre-heater. In the pre-heater, the ethylene is preheated to the initiation temperature. The outlet temperature of the pre-heater is controlled at 160 °C to 165 °C. From the pre-heater, ethylene enters the reactor at a pressure of about 2650 bar absolute, where the first injection of initiator starts the polymerization. Due to the polymerization reaction, the temperature will increase rapidly until all initiator has been consumed, resulting in a temperature of 260 °C to 300 °C. When the temperature of the reaction mixture has dropped to an economically low level, the second initiator injection is performed. This again causes the temperature to rise to a temperature of 260 °C to 300 °C. After cooling down the reaction mixture, the injection of initiator is repeated two more times into the third and fourth polymerization section, in order to obtain an optimum degree of conversion. The reactor is cooled by demineralised water, circulated in a closed loop.

The separation of the polymer and unconverted ethylene is performed in two steps, respectively in high-pressure separator and low-pressure separator. After separation in high-pressure separator, unconverted ethylene is returned to first stage of the second compressor, and the separated polymer is cooled in a heat exchanger and enters the low-pressure separator.

From low-pressure separator, the polyethylene flows by gravity to the hot melt extruder. The hot melt extruder is provided with an underwater pelletizer. The product pellets leaving the pelletizer with pelletizing water are dried in centrifugal dryer. After classification the normal size dry pellets are discharged to the lot composition and storage area.

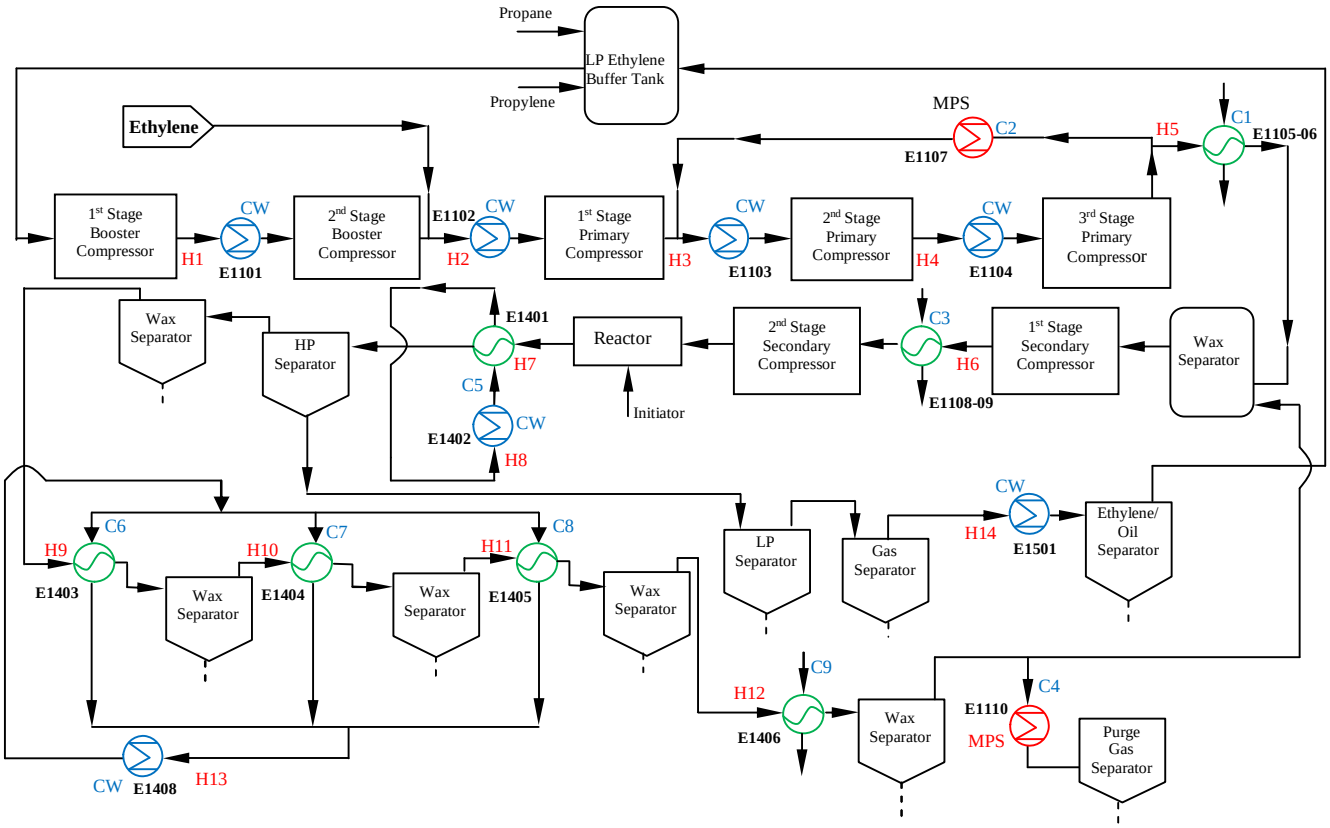

Figure 1: Process flow diagram of the LDPE production process

3. Data extraction

Data extraction is the first and most crucial part of a process integration study. The data collected may include the material and energy balance data, physical and chemical properties of materials and costing data that are used to estimate the capital investment. The physical and chemical properties, supply (T_s) and target (T_t) temperatures, mass flow rate and enthalpy change (ΔH) of the process streams are extracted from process flow diagram of the plant. The chemical and physical properties of streams are assumed constant along the process. By these data, it is possible to understand the current energy situation for each stream in the whole process, and the data for heat capacity are necessary. Each process stream is classified either as a hot streams and heat energy has to be supplied to cold streams. Heat transfer coefficients of streams are calculated by using properties of streams, namely the velocity, density, viscosity and geometric data of existing heat exchangers and experimental correlations.

The process flow diagram of the case study is shown in figure 1. Tables 1 and 2 show the hot and cold streams data collected from the plant. Furthermore, the cost data is obtained from the plant. The hot utility used in this LDPE plant is medium pressure steam and the cold utility is supplied by cooling water. The necessary data of utilities are shown in table 3.

Table 1: hot process streams data

Stream number	T_{in} (°C)	T_{out} (°C)	Heat duty ΔH (kW)	Heat transfer coefficient h (kW/m2.° C)	Heat capacity flow rate CP (kW/°C)
H1	129	45	739	0.299	8.798
H2	124	45	795	0.601	10.062
H3	101	45	3052	1.090	54.500
H4	88	45	3252	2.057	75.628
H5	80	40	2115	1.050	52.875
H6	100	40	4860	0.623	81.000
H7	310	240	6090	0.972	87.000
H8	80	42.5	6090	8.820	162.400
H9	240	127	6850	0.918	60.620
H10	127	83.8	2680	0.920	62.037
H11	83.8	66.5	1070	0.925	61.850
H12	66.5	40	1581	0.897	59.660
H13	70.1	55	10578	8.900	700.530
H14	240	45	1421	0.168	7.287

Table 2: cold process streams data

Stream number	T_{in} (°C)	T_{out} (°C)	Heat duty ΔH (kW)	Heat transfer coefficient h (kW/m2.° C)	Heat capacity flow rate CP (kW/°C)
C1	20	27	1044	1.006	149.000
C2	20	28	1854	3.160	231.75
C3	80	130	1546	1.331	30.920
C4	40	125	976	1.189	11.482
C5	50	80	6090	1.000	203.000
C6	55	84.3	6850	1.215	234.000
C7	55	66.5	2680	1.190	233.000
C8	55	59.5	1070	1.172	238.000
C9	20	26	1581	1.000	264.000

Table 3: utility data

Utility	T (°C)	Heat transfer coefficient h (kW/m2.° C)	cost ($/(kW.year))
Cooling water	38-48	2.30	19.7
Medium pressure steam	205-200 in 16 bar	1.85	147.8

4. Energy analysis for the existing heat exchanger network

From tables 1 and 2, the existing plant HEN is found to have 14 hot and 9 clod process streams. Figure 2 shows the grid diagram for the existing HEN.

There are a total of 20 heat exchangers in the existing process. This includes 8 process-to-process heat exchangers, 10 coolers (C) and 2 steam heaters (H). The types of heat exchangers used are shell and tubes heat exchangers. The existing hot and cold utility requirements are 2,522 kW and 30,004 kW respectively, with a total heat recovery of 21,169 kW by process-to-process heat exchangers.

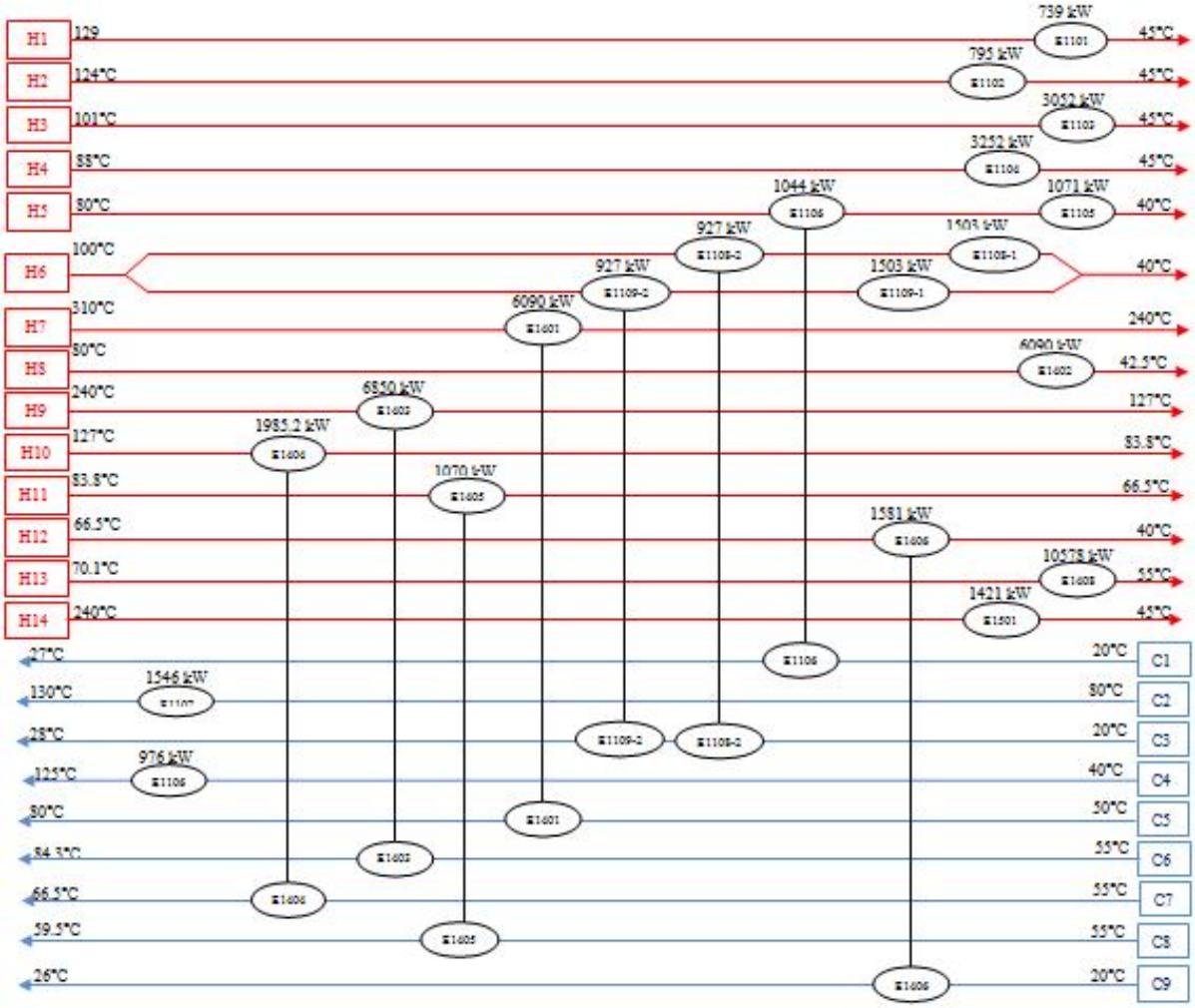

Figure 2: grid diagram of existing heat exchanger network

The minimum temperature difference (ΔT_{min}) of the existing HEN is 48.2°C. Figure 3 is a composite curve at ΔT_{min}= 48.2 °C. The composite curve has two curves, which are a hot composite curve and a cold composite curve. Each curve represents composited hot streams and cold streams [2]. Therefore the composite curve shows heating and cooling demand of the process corresponding to the temperature range. The hot and cold composite curves are located in the most adjacent position to find the amount of maximum energy recovery. The distance between these two curves in this position is ΔT_{min}, which means the minimum driving force for heat exchange. Temperature differences of the two curves have to be over ΔT_{min} in all temperature range. At the pinch point, two curves approach closest and temperature difference of two composite curve is ΔT_{min} [4]. In figure 3, utility consumption and heat recovery are shown. The pinch point of the process is 75.9 °C. Therefore, the hot pinch temperature is 100 °C and cold pinch temperature is 51.8 °C at ΔT_{min}= 48.2 °C.

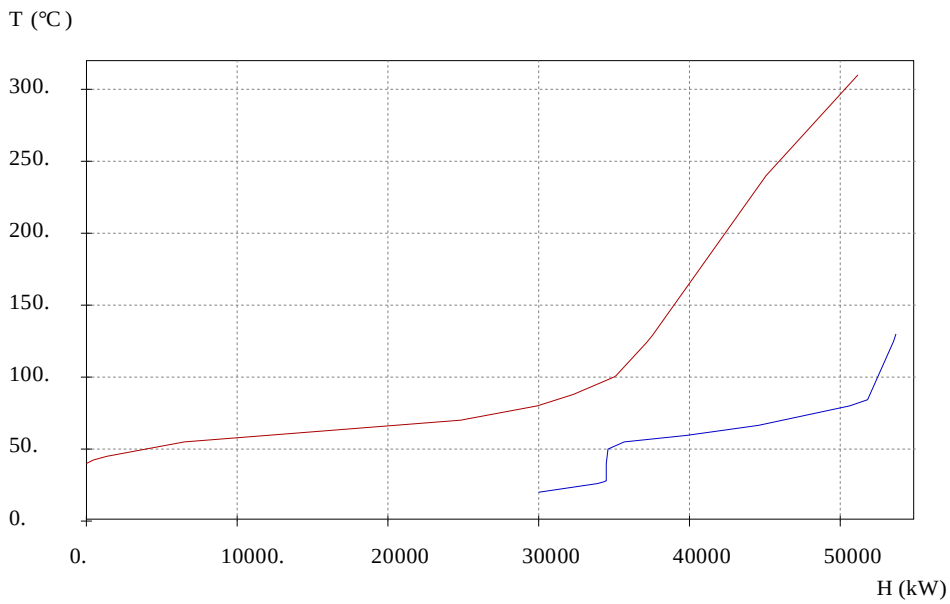

Figure 3: Composite curve at ΔT_{min}= 48.2 °C

5. Heat exchanger network optimization

The main task of optimization is determination of optimal ΔT_{min} for the case through determination of the minimum heat exchange area, optimal number of heat exchanger units, and minimum costs (operational and capital cost).

The ΔT_{min} plays the basic role in the economical efficiency of heat exchangers because of its direct effect on quantity and area of heat exchange. The value of ΔT_{min} is different depends on the characteristic of a process. In a heuristic pinch problem, a process with high temperatures over than 300 °C uses over 20 °C of ΔT_{min}. A process with very low temperatures about 0 °C uses under 5 °C of ΔT_{min} [4]. In this study, the initial ΔT_{min} for starting with pinch analysis is 48.2 °C, the existing heat exchanger network ΔT_{min}. The calculations of the pinch analysis algorithm are started with this value of ΔT_{min}.

The cost needs to be annualized to study the economics in terms of yearly savings and pay-back time, and cost trade-off in energy and capital. The capital cost (C) is estimated using the following correlation:

$$C = a + b.A^c \quad (1)$$

where A is a heat exchanger area, a represents a fixed cost of installation independent of area , b the exchanger cost per area and which also accounts for different materials of construction and c the parameter based on heat exchanger type or operating pressure.

To calculate and annualize the cost targets, values of the utility prices, 8000 yearly operating hours and a pay-back time of 12 years with interest rate of 4% were used. The capital cost estimated for the heat exchangers of the original design and that after pinch analysis are based on the purchase cost.

In this case, the exchangers are shell and tubes and material of construction is carbon steel, and the equation of capital cost of a heat exchanger is as follows, referring to the work of Al-Riyami [5]:

$$C = 33{,}422 + 814.\,A\,(m^2)^{0.81} \quad (2)$$

To calculate more accurate cost of heat exchangers, a module factor is applied. The cost parameters in equation (2) only consider an exchanger cost. However installation cost is also necessary. A module factor was developed to calculate total capital cost including equipment cost and installation cost by Guthrie [6].

$$\text{Total cost} = \text{Module factor} \times \text{Equipment cost} \quad (3)$$

In this study a module factor, 3.4, is used.

To reach an optimal ΔT_{min} value, the total annual cost (sum of total annual energy and capital cost) is plotted at varying ΔT_{min} values. Figure 4 shows the network costs (operating, capital and total cost) versus ΔT_{min}.

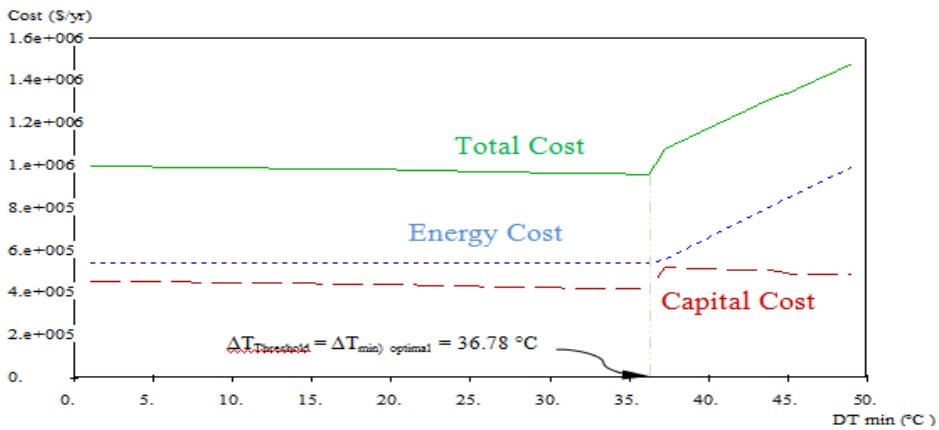

Figure 4: operating-capital cost trade-off

As shown in this figure, energy costs are constant below $\Delta T_{Threshold}$ (the threshold ΔT_{min}), since utility demand is constant, but the capital cost is decreased due to increasing of exchangers heat transfer area. The only utility to be used for these values of ΔT_{min} is cooling water.

An optimum ΔT_{min} exists where the total annual cost of energy and capital is minimized. This value is obtained 36.78 °C, threshold ΔT_{min}, based on pure counter-current heat exchangers for present case. For this value of ΔT_{min}, capital cost targeting is 512,433 $/year, energy cost targeting is 541,395 $/year and total cost is obtained 1,053,828 $/year. The sudden increase observed in capital cost curve is due to the change in the number of heat exchangers. The energy costs are also starts rising up at this point, because of the increasing of energy requirement from hot and cold utility.

6. Heat exchanger network design

The philosophy in the pinch design method is to start where it is most constrained. If the problem has pinch point, the problem is most constrained at the pinch. If there is no pinch, the problem is called *threshold problem* that needs either hot utility or cold utility but not both. In one typical threshold problem, the most constrained part of the problem is at no-utility end where temperature differences are smallest.

In another threshold problem, the minimum temperature difference is in the middle of the problem causing a pseudo-pinch. The best strategy to deal with this type of the threshold problem is to treat it as a pinch problem. This problem is divided into two parts at the pseudo-pinch and the pinch design method followed. The only complication in applying the pinch design method for such problems is that one half of the problem will not feature the flexibility offered by matching against utility [7].

As shown in figure 5, the problem of the present case is a threshold problem of second type with optimal temperature difference 36.78°C (in pseudo-pinch) that needs just cold utility. The minimum requirement for cooling water (Q_{Cmin}) for this optimal value is 27,482 kW and there is no need for hot utility (Q_{Hmin}=0).

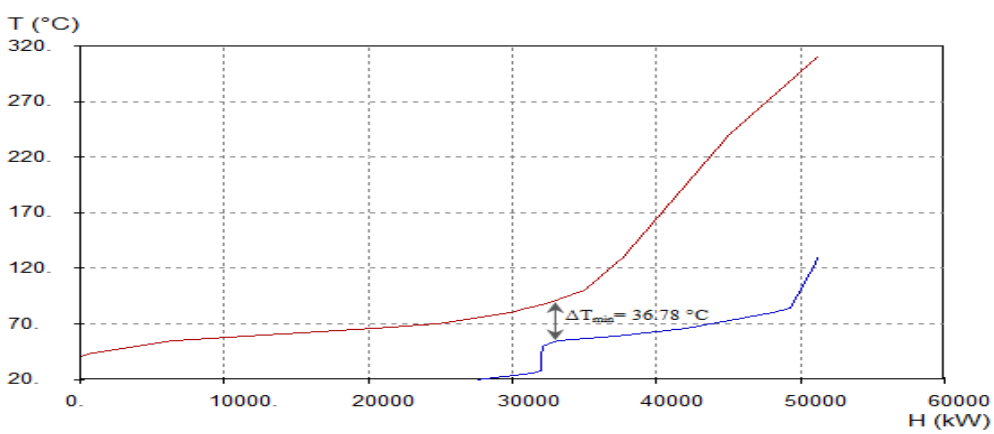

Figure 5: Composite curve at ΔT_{min}= 36.78 °C
(hot and cold pinch temperatures are 91.78 °C and 55 °C, respectively)

The grid diagram of completed design for optimal value of ΔT_{min} (after designing for above and below the pinch separately) is shown in figure 6. This network consists of 14 hot streams H1 to H14 and 9 cold streams C1 to C9. Hot streams are located in the upper side of the grid diagram and clod streams are in the lower side.

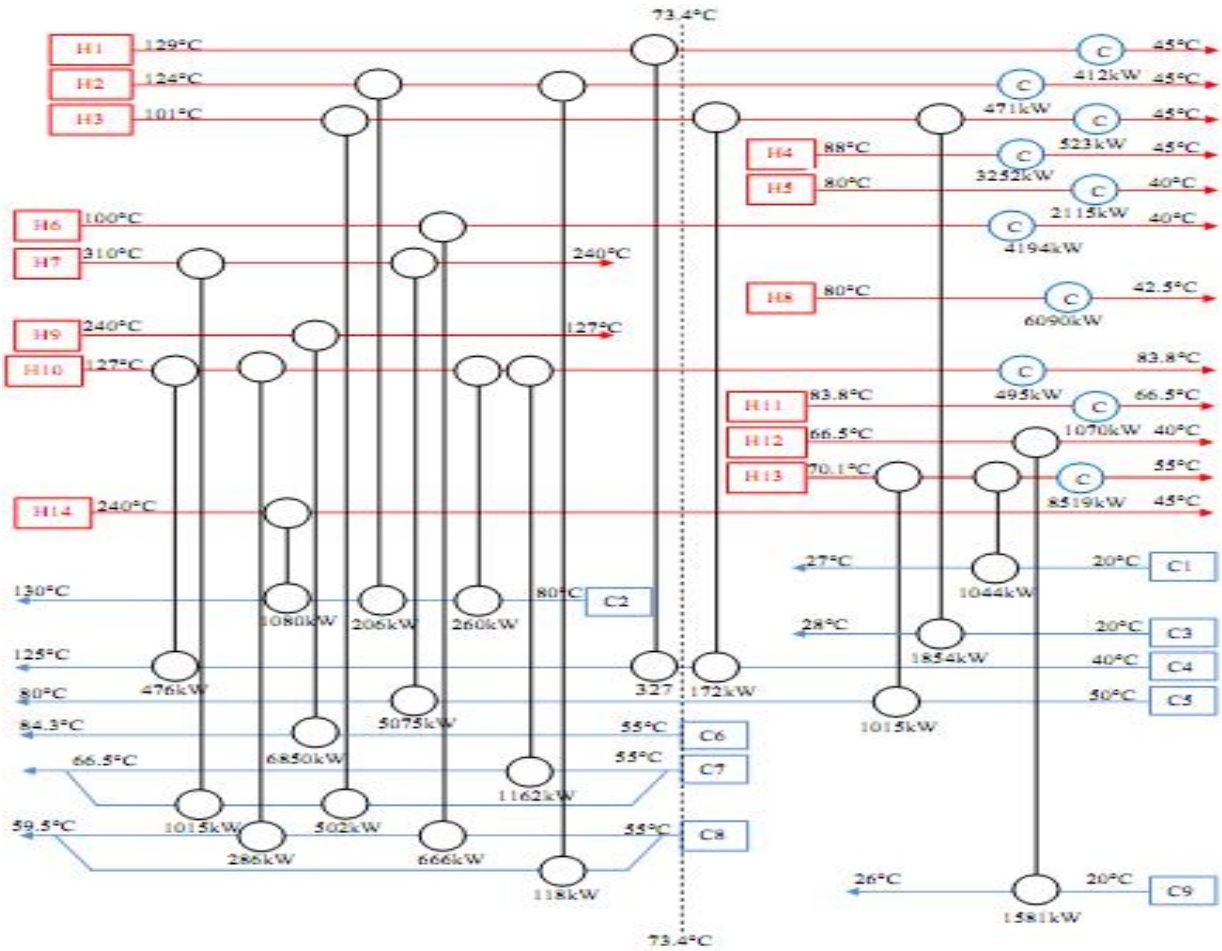

Figure 6: grid diagram of optimum design (ΔT_{min}= 36.78 °C)

7. RESULTS

As shown in figures 2 and 6, the number of heat transfer units is 28 for the optimum design compared to 20 for the existing design, but there is no need for hot utility, and energy requirement form cold utility is decreased. The network heat transfer area is obtained 2779 m^2 based on pure counter-current heat exchangers (1-1 exchangers). The capital cost of optimum designed network is 651,143 $/year. The comparison between existing and optimum designed network costs are shown in table 4.

Table 4: Comparison of existing and optimum designed network costs

	Existing network	**Optimum designed network**	**Saving**	
			Amount	Percent
Q_{Hmin} (kW)	2,522	0	2,522	100 %
Q_{Cmin} (kW)	30,004	27,482	2,522	8.4 %
Energy cost ($/year)	963,831	541,395	422,436	43.8 %
Capital cost ($/year)	497,383	651,143	-153,760	-30.9 %
Total cost ($/year)	1,461,214	1,192,538	268,676	18.8 %

The minus sign for capital cost means that the capital cost for new design is more than existing network.

8. Conclusion

In this work, great saving in economy and utility consumption of a low density polyethylene plant (LDPE plant in Aryasasol polymer complex) can be achieved by applying heat exchanger network analysis methodology through pinch design technology. From figure 4, we obtained the optimal ΔT_{min} of 36.78 °C for the process with least overall cost and designed heat exchanger network for the plant at this value of ΔT_{min}.

From the thermodynamic point of view, as shown in figure 5, the process requires only cooling utilities and does not need any heating utility. This case study corresponds to that of a threshold problem where only cold utility is needed. Therefore saving about 37,500 ton per year in medium pressure stream (100% reduction in energy consumption from hot utility) compared to that of existing network is realized. From table 4, we found that energy requirement from cooling water is also reduced about 8.4%; On the other hand, the optimum network needs more total heat transfer area about 275 m^2 than existing network, thus resulting in 30.9% increasing in capital cost. The net result is saving about 18.4% in the annualized total cost.

This study shows that the pinch technology method gives a clear overall view in respect to energy consumption efficiency in process plants, and should be accomplished regularly for designing new and investigating existing plants in order to choose the optimal alternative.

REFERENCES

[1] S. A. El-Temtamy, I. Hamid, E. M. Gabr, and S. El-Rahman, "The Use of Pinch Technology to Rrduce Utility Consumption in a Natural Gas Processing Plant," *Petroleum Science and Technology,* vol. 28, pp. 1316-1330, 2010.

[2] B. Linnhoff, D. W. Townsend, D. Boland, G. F. Hewitt, B. E. A. Thomas, A. R. Guy, and R. H. Marsland, *A user guide on process integration for the efficient use of energy*. Oxford: pergamon Press., 1982.

[3] U. V. Shenoy, *Heat exchanger Network synthesis: The Pinch Technology-Based approach*. Houston: Gulf Publishing Company, 1985.

[4] Y. Sung-Geun, L. Jeongseok, and p. Sunwon, "Heat Integration Analysis for an Industrial Ethylbenzene Plant Using Pinch Analysis," *Applied Thermal Engineering,* vol. 27, pp. 886-893, 2007.

[5] B. A. Al-Riyami, J. Klemes, and S. Perry, "Heat Integration Retrofit Analysis of a Heat Exchanger Network of a Catalytic Cracking Plant," *Applied Thermal Engineering,* vol. 21, pp. 1449-1487, 2001.

[6] K. M. Guthrie, "Capital cost estimating," *Chemical engineering,* vol. 76, pp. 114-142, 1969.

[7] R. Smith, *Chemical Process Design*. New York: McGraw-Hill, 1995.